JKF Industri

CLEAN AIR INNOVATION SINCE 1957

Fan systems

Product programme

Sales, delivery and payment terms

1. Validity
These sales, delivery and payment terms apply to all offers, orders and deliveries unless otherwise agreed in writing.

2. Offers
All offers are made subject to the goods being unsold. If JKF Industri makes an offer that does not stipulate a specific time for acceptance, the offer will expire if acceptance is not submitted by the purchaser within 8 weeks of the date of the offer.

3. Price
All prices are in Danish kroner (DKK) and do not include VAT. For countries that are members of the single currency, prices are stated in euro (EUR) as of 01/01/2002.

4. Payment
Payment terms are 14 days –2% cash discount of item price excl. VAT or 30 days net calculated from the date of invoice unless otherwise agreed in writing. If payment is made after the due date, and the delay is no fault of JKF Industri's, JKF Industri is entitled to charge interest on the sum outstanding as from the due date, at a rate equivalent to 1.5% per month or part month.
The purchaser is not entitled to offset any counterclaims against JKF Industri that have not been recognized in writing by JKF Industri, and does not have the right to withhold any of the purchase sum by reason of counterclaims of any kind.

5. Retention of title
JKF Industri reserves the right, with the limitations resulting from mandatory laws, to retention of title to the item sold until payment of the entire purchase sum, plus any costs incurred, to JKF Industri.
If the item has been sold with a view to later being built into or joined to other objects, the item sold is not covered by the right of retention once that installation or joining has taken place.

6. Delivery
Unless otherwise agreed between the parties, the stated delivery times are EXW JKF Industri's address, with reservation for any delays.
In use of EXW, the goods are considered delivered and the order executed from the moment the goods are issued from JKF Industri's warehouse. Dispatch is at the receiver's expense and risk. Any transport insurance is the responsibility of the purchaser.
The delivery stipulations agreed between the parties are to be interpreted with reference to the INCOTERMS current at the time of signing the agreement.
The delivery date is set by JKF Industri to the best of their judgment, and if this cannot be kept to, the purchaser will be informed of this and of when, as far as is possible, the delivery can be expected to take place.
A delay does not give the purchaser the right to cancel the purchase.

7. Packaging
Packaging may only be returned by prior agreement. Return of packaging is at the purchaser's expense and risk.
The purchaser's packaging will be credited after reception and approval of the packaging.

8. Product information
All illustrations, technical drawings and brochures issued by JKF Industri before or after the agreement has been entered into remain the property of JKF Industri, and must be returned to JKF Industri on request. The aforementioned materials may not be passed on without written agreement or misused in any other way.

9. Defect liability in accordance with the Danish Sale of Goods Act and notification of defects
On delivery the purchaser must immediately carry out an examination of the goods in accordance with the Danish Sale of Goods Act. For a period of 12 successive months after delivery has taken place, JKF Industri undertakes to carry out replacement deliveries if there are defects in the order due to material or manufacturing faults.
Defects in goods will be either remedied or replaced at JKF Industri's discretion.
Modification of or interference with the goods without JKF Industri's written consent releases JKF Industri from any obligation.
If the purchaser wishes to complain about any defects, a written claim must be submitted without undue delay, and no later than 14 days after delivery had taken place. JKF Industri is entitled to reject any claims received after expiry of the period stated above.
If JKF Industri receives a prompt claim concerning a defect that is deemed to be covered by these regulations, JKF Industri will remedy the defect without delay.
JKF Industri offers the right for remedy of defects for parts of the order that have been replaced or repaired under the same terms and on the same basis as for the original order. JKF Industri's obligation to remedy defects does not, however, apply to any part of an order more than18 months after delivery to the purchaser.
Once liability for the order has transferred to the purchaser, JKF Industri bears no responsibility for any defects over and above the obligations specified in these terms.
JKF Industri thus expressly renounces responsibility for any indirect loss such as operating loss, loss of time, loss of profits, etc. that the defect may have caused the purchaser.
Any compensation claim against JKF Industri may not exceed the invoice amount for the product sold.
JKF Industri is not liable for any operating loss, loss of profits or other indirect loss in consequence of the agreement, including indirect losses arising as a result of delays or defects with regard to the goods sold.
The following circumstances are intended as examples of events resulting in exemption from liability should they occur after the signing of the contract and prevent its fulfilment:
Industrial disputes, strikes, lockout or any other circumstance outside the control of the parties such as fire, war, mobilisation, unexpected military call-up, acts of sabotage, requisitioning, confiscation, currency restrictions, import ban, export ban, riots, unrest, fuel shortage, general scarcity of goods, restrictions in power supplies and defects in deliveries from sub-suppliers or delays with such deliveries as a result of any of the aforementioned circumstances.
It should be specifically noted that the above is not an exhaustive list of examples, and there may be other examples that come under limitation of liability.
If delivery is temporarily delayed by one or more of the aforementioned circumstances, the delivery time will be correspondingly postponed.

10. Return
Items sold will only be accepted for return by prior agreement. Return will be at the purchaser's expense and risk and should include reference to JKF Industri's invoice no. and the date of the original delivery.
Returned items will be credited after inspection by the Goods Received department, normally at 85% of the invoice price less costs for inspection and preparation.
If JKF Industri is charged for shipping costs etc., JKF Industri is entitled to demand these be refunded by the purchaser and to offset these against any claims by the purchaser against JKF Industri. After completion of repairs or in the case of replacement, delivery will take place from JKF Industri as per point 6.

11. Product liability
JKF Industri is not liable for damage to property or effects that occurs while the item is in the possession of the purchaser. Neither is JKF Industri liable for damage to products manufactured by the purchaser or to products of which these form a part. JKF Industri is not liable for any operating loss, lost earnings or other indirect loss.
To the extent that product liability may be imposed on JKF Industri with regard to third parties, the purchaser is obliged to compensate JKF Industri to the same extent that JKF Industri's liability is limited as per the above.
These limitations to JKF Industri's liability do not apply if JKF Industri is guilty of gross negligence.
If a third party puts forward a claim against one of the parties for compensation with reference to this point, this party must immediately inform the other party about this. The purchaser is obliged to allow themselves to be sued at the same court that handles the claims for compensation against JKF Industri in consequence of damage that is alleged to have been caused by a defect in one of JKF Industri's deliveries.
JKF Industri's liability for product damage may at no time exceed the cover amount of JKF Industri's product liability insurance.

12. Applicable law and venue
Any disagreement between the parties is to be finally settled in arbitration by the "common court of judgement and arbitration at the Copenhagen Stock Exchange" or by the court at 9575 in Terndrup, irrespective of whether the case is a High Court case by nature.
All disagreements between the parties must be settled according to Danish law, including the Danish Sale of Goods Act. The International Sale of Goods Act (CISG) is to be neither wholly nor partially applied.

Table of contents

Section 00. General

Sales, delivery and payment terms ..... Page 02
Table of contents ..... Page 03
Fan types ..... Page 04
Fan selection ..... Page 05 - 07
How to read fan graphs ..... Page 08

Section 01. Fan types JK-20D – JK-40D

Fan types JK-20D - JK-40D general ..... Page 09
Fan type JK-20D ..... Page 10
Fan type JK-22D ..... Page 11
Fan type JK-25D ..... Page 12
Fan type JK-30D ..... Page 13
Fan type JK-35D ..... Page 14
Fan type JK-40D ..... Page 15

Section 02. Fan types JK-30K - JK-75K

Fan types JK-30K - JK-75K general ..... Page 16
Fan type JK-30K ..... Page 17
Fan type JK-40K ..... Page 18
Fan type JK-45K ..... Page 19
Fan type JK-55K ..... Page 20
Fan type JK-75K ..... Page 21

Section 03. Fan types T-200K and T-300K

Fan types T-200K and T-300K general ..... Page 22
Fan type T-200K ..... Page 23
Fan type T-300K ..... Page 24

Section 04. Fan types JK-30MTD and JK-40MTD

Fan types JK-30MTD and JK-40MTD general ..... Page 25
Fan type JK-30MTD ..... Page 26
Fan type JK-40MTD ..... Page 27

Section 05. Fan types JK-30MT - JK-100MT

Fan types JK-30MT - JK-100MT general ..... Page 28
Fan type JK-30MT ..... Page 29
Fan type JK-40MT ..... Page 30
Fan type JK-50MT ..... Page 31
Fan type JK-60MT ..... Page 32
Fan type JK-70MT ..... Page 33
Fan type JK-80MT ..... Page 34
Fan type JK-90MT ..... Page 35
Fan type JK-100MT ..... Page 36

Section 06. Fan types BL-400 and BL-500

Fan types BL-400 and BL-500 general ..... Page 37
Fan type BL-400 ..... Page 38
Fan type BL-500 ..... Page 39

Section 07. High-pressure fans type JK-HT Injectors and feeder units

High-pressure fans type JK-HT ..... Page 40 - 41
Injectors and feeder units ..... Page 42

Section 08. Accessories

Square flanges type A ..... Page 43
Round flanges ..... Page 43
Twist throttles ..... Page 44
Acoustic booths type BH ..... Page 45 - 46
Duct silencers ..... Page 47 - 48
Flexible connections ..... Page 49
Vibration dampers, cooling wings, gaskets, pullers ..... Page 50 - 51

ZERTIFIKAT • CERTIFICATE • 認証証書 • СЕРТИФИКАТ • CERTIFICADO • CERTIFICAT

TÜV

EC-Certificate
No. EX9 03 08 48836 001

Holder of Certificate: **JKF Industri A/S**

Rønsangervej 5, A/s
9560 Hadsund
Denmark

Name of Object: **Non-electric devices and components group II**

Fans

This EC-Certificate is issued according to Article 8(1) b) ii) of Council Directive 94/9/EC for equipment and protective systems intended for use in potentially explosive atmospheres (ATEX). It confirms the receipt and storage of the file for the listed product by TÜV PRODUCT SERVICE GMBH. See also notes overleaf.

Test report no.: 73051621

Date, 2003-08-05

TÜV PRODUCT SERVICE GMBH is a Notified Body in accordance with Council Directive 94/9/EC for equipment and protective systems intended for use in potentially explosive atmospheres with the identification number 0123.

Page 1 of 2

TÜV PRODUCT SERVICE GMBH • Zertifizierstelle • Ridlerstrasse 65 • D-80339 München
Unternehmensgruppe TÜV Süddeutschland

Fan types

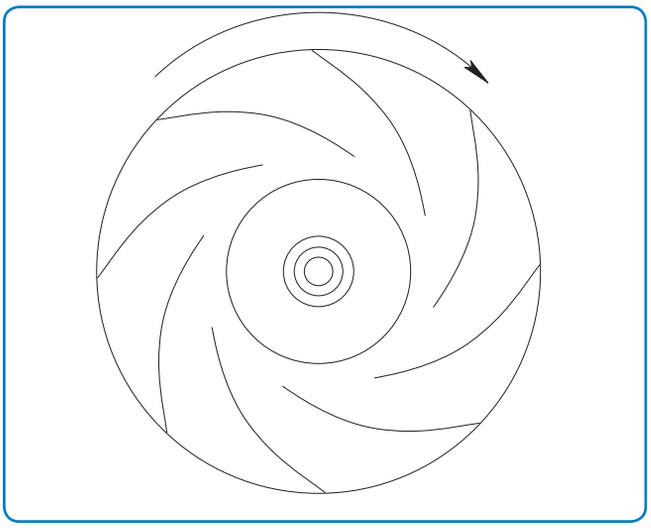

Radial fan with P-impeller

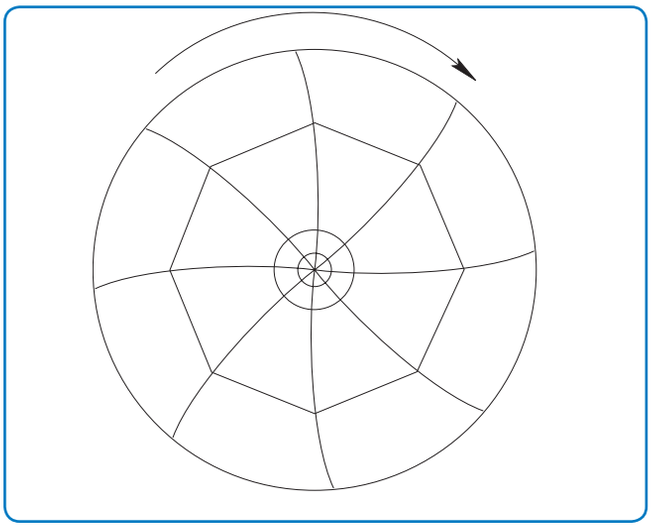

Radial fan with T-impeller

General
Resistance occurs in all forms of air transport due to friction which means that overall pressure is reduced in the flow direction. To effect and maintain air transport, pressure has to be increased at some stage to compensate for pressure loss. This is usually achieved in fan systems using radial and axial fans designed to boost air flow in the direction of the outlet.

Definitions
Static pressure: p_s
Dynamic pressure: p_d
Total pressure: p_t

Static pressure is designated positive or negative depending on whether there is over or under pressure in the duct. On the other hand, dynamic pressure is always positive and depends on the speed of the air in the duct.

Total pressure must always be equal to the sum of the static and dynamic pressure at the measurement point, which can be expressed as:
$P_t = P_s + P_d$

Volume flow
A fan's effect is always based on actual volume flow through the inlet. If the volume flow is indicated at a temperature different to that at the fan in a given operating situation, it must be corrected.

Temperatures
The graphs indicate 20°C. Fans can be used for temperatures up to 60°C without physical modification.
At temperatures other than 20°C, the air density is changed. This means it may be necessary to adjust the RPM. At temperatures over 20°C the fan will generally be giving reduced effect in relation to the rise in temperature.
For high temperatures, the following should be taken into consideration: bearings and lubricant - whether the fan should be fitted with cooling wings – whether the motor should be supplied with extra cooling (particularly important for frequency regulation). For temperatures in excess of 60°C, extra cooling is required.

Fan types
Motors and fans are usually supplied as a unit. JKF has designed its fans for optimal performance, and it is vital to select the right one for any given task. The speed at which the fan is to run can be seen from the graph for that fan. The power input required depends on resistance in the system.

There are many types of fan impeller, each of which is designed for a given task:

- Radial fan with P-impeller
- Radial fan with T-impeller

Radial fan with P-impeller
Has flat backward-inclined blades and is designed for clean air transport. This type has the following properties:

- High efficiency
- Robust construction
- Only small variations in volume flow if resistance fluctuates.

Radial fan with T-impeller
Has backward-inclined blades and is designed for transport of a range of materials. This type has the following properties:

- Medium and high-pressure versions
- Robust construction
- High degree of self-cleaning
- Can handle large material volumes
- Special version available for transport of plastic and paper

All fans are ATEX-certified in accordance with Directive 94/9 EF.

Fan selection

Useful effect
Theoretical pressure increase is never achieved in practice, as all fans work with several unavoidable types of loss, including:

- Friction loss in housing and impeller
- Thrust loss at blade inlet
- Leakage between housing and impeller
- Loss due to impeller friction
- Loss in motor, belts and bearings

JKF states the total useful effect.

The useful effect for a given operating point indicates the relationship between the utilisation effect (air effect) and the power input (shaft effect). The utilisation effect is the product of volume flow and total pressure increase.
The useful effect of the fan can be expressed as follows:

$$\eta_v = \frac{q_v \times \Delta p_1}{P}$$

and its effect consumption as:

$$P = \frac{q_v \times \Delta p_1}{\eta_v} [W]$$

where

P = shaft effect [W] of the fan
q_v = volume flow [m^3/s]
Δp_1 = total pressure increase [Pa]
η_v = useful effect of the fan [decimal fraction]

Any loss from the belt drive and motor have to be added, so that total effect consumption can be expressed as:

$$P_1 = \frac{q_v \times \Delta p_1}{\eta_v \times \eta_r \times \eta_m}$$

where

η_v = useful effect of the fan
η_r = useful effect of the belt
η_m = useful effect of the motor

Fan diagram
For description of fans for specific solutions, the following parameters are required:

- Volume flow
- Pressure increase
- Effect consumption
- RPM
- Useful effect
- Noise intrusion

Fan graphs are based on a density of 1.2 kg/m^3 equivalent to air density at 20°C and barometric pressure of 101.3 kPa.

Capacity regulation of fans
All fan systems of any size can be fitted with capacity regulation to match volume flow to the usage patterns of the plant. Depending on operating requirements, fan performance can be regulated in several ways:

- Pole-switching between two fixed speed regulator values (2-speed motor)
- Twist throttle on fan inlet side
- RPM regulation using a frequency transformer
- A combination of the above

Using a frequency transformer maintains the fan useful effect almost unchanged across the entire regulation range and avoids noise being created during regulation.

Accessories
- Twist throttle is available as a component
- 60 Hz impeller

The impeller has to be modified for 60 Hz direct drive fans. Belt-driven fans are adjusted via the pulleys.

The SKF bearing housings on the fans are types SNL…TA, with V-gasket TSN…A.

Surface treatment
The products are finished in powder paint or galvanised with a zinc thickness of min. 275 g/m^2.
The finish consists of a specified primer treatment and then powder paint.

Primer treatment:	Internal/external sandblasting to SA 2.5
Primer:	Zinc priming of all sharp edges 70 µm
Topcoat:	Polyester powder of industrial quality, min. 80 µm

All painted products are standard blue RAL 5010. Can be supplied in other colours at extra cost.

Test
All fans are tested for function and vibration.

When ordering, JKF requires the following information:
Fan type – air volume – air temperature - pressure – material transport/ nature – installation conditions – noise levels – effect consumption - motor – motor integrity class – operating time - surface treatment, zone placing (ATEX) – and any other requirements.

Fan selection

Type JK-D

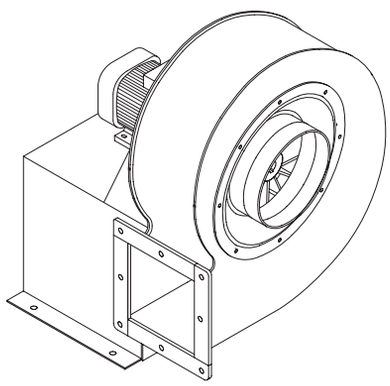

- Transport fan
- Direct drive
- Air volume from 750 to 11,000 m^3/h
- Pressure: 110 — 440 mm WG

Type JK-K

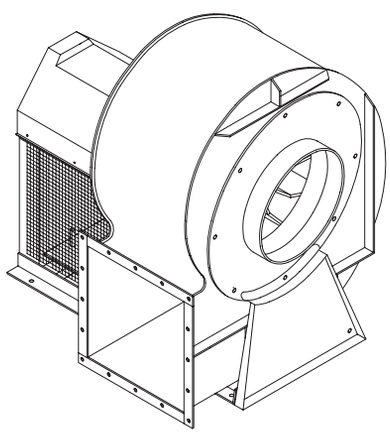

- Transport fan
- Indirect drive
- Air volume from 2,800 to 40,000 m^3/h
- Pressure: 60 — 370 mm WG

Type T-K

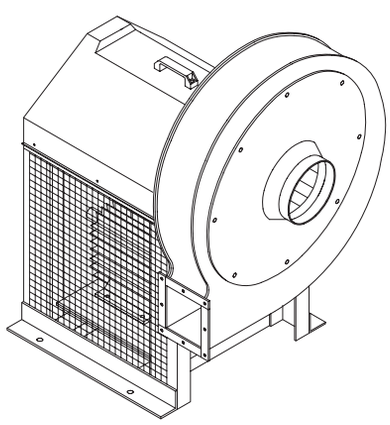

- Transport fan
- Indirect drive
- Air volume from 2,000 to 13,000 m^3/h
- Pressure: 250 — 1,000 mm WG

Fan selection

Type JK-MTD

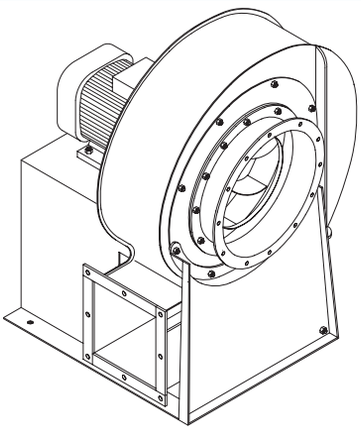

- Clean air fan
- Direct drive
- Air volume from 2,000 to 14,000 m^3/h
- Pressure: 120 — 380 mm WG

Type JK-MT

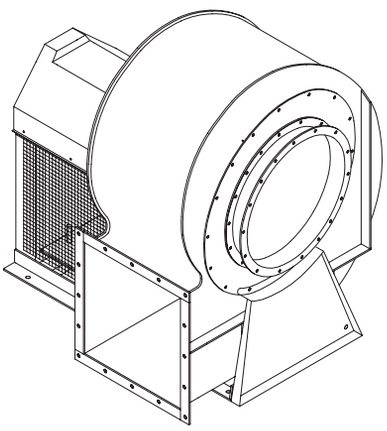

- Clean air fan
- Indirect drive
- Air volume from 2,500 to 115,000 m^3/h
- Pressure: 80 — 600 mm WG

Type BL

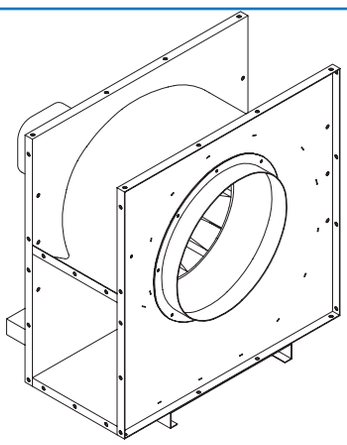

- Clean air fan
- Direct drive
- Air volume from 2,500 to 11,000 m^3/h
- Pressure: 45 — 70 mm WG

How to read fan graphs

In practice it is highly likely that the operational point for a fan will not appear on the graphs referring to useful effect, but between them.
Determination of values for the operational point selected can be calculated using the following formulas:

Total useful effect

$$\eta_T = \frac{p \times Q \times 9{,}81}{1000 \times P}$$

p = Total pressure read from graph in mm WG
Q = Air volume read from graph in m^3/h
P = Power input to electric motor in kW

When calculating useful effect

When only working with power input to the impeller, the following formulas can be used:

For *direct drive fans* the useful effect is
$\eta_D = \eta_T + 10\%$
For *indirect drive fans* the useful effect is
$\eta_{ID} = \eta_T + 10\% + 6\%$

For noise calculation

The following formulas can be used along with sound measurement apparatus:

RPM adjustment:

$$L_2 = L_1 + 60 \times \log \frac{n_2}{}$$

L_1 = Noise level at RPM n_1
n_2 = New RPM

Noise level at various distances:

$$L_{PA} = L_{WA} - (20 \times \log R) + (10 \times \log Q) - 11 \text{ dB(A)}$$

L_{WA} = Noise effect
R = Distance between noise source and receiver
Q = Direction factor
Q = 2 (hemispherical spread)
Q = 4 (quartspherical spread)
Q = 8 (octaspherical spread)

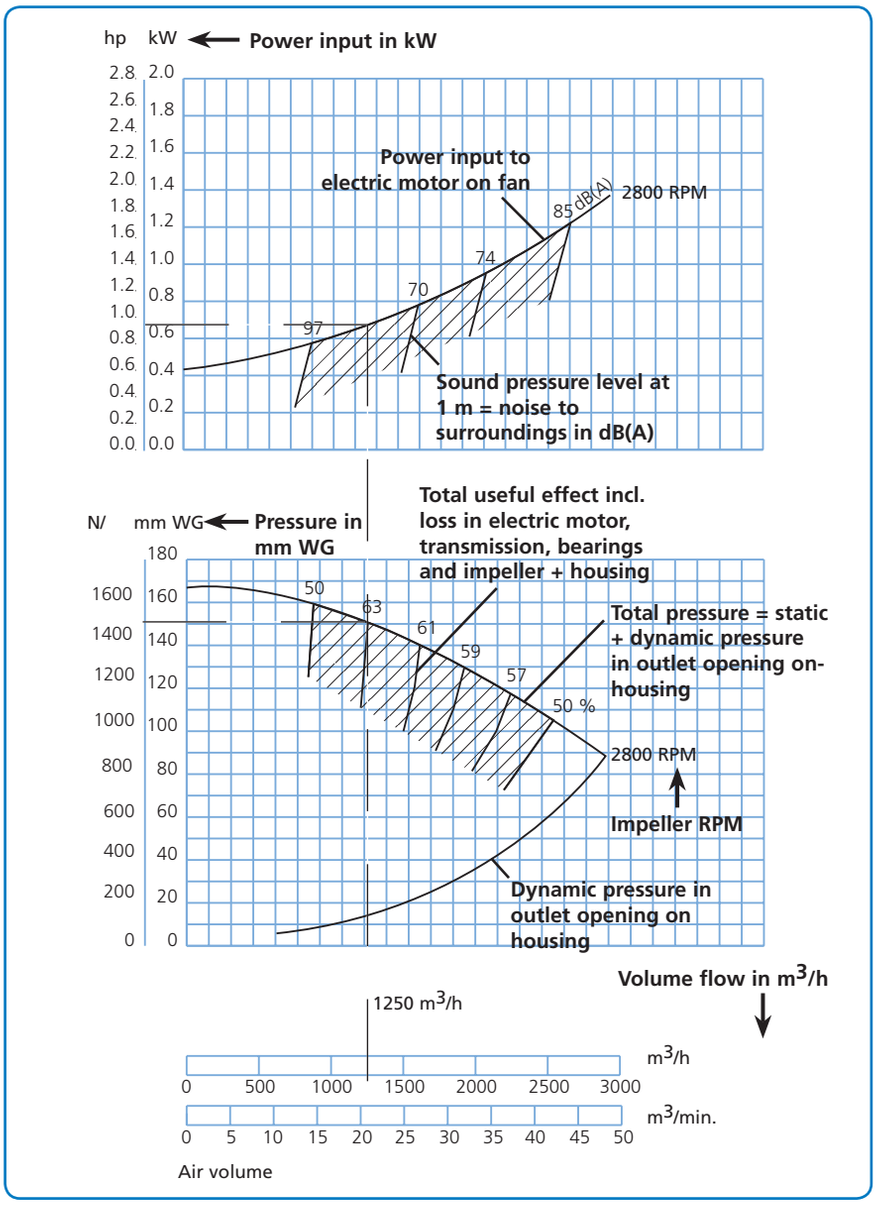

Example at 1250 m^3/h

Read-off from graph for useful effect and pressure will show 150 mm WG and useful effect of 63%. The power input graph will show a read-off of 0.7 kW at 1250 m^3/h.

Every effort should be made to set a fan up to achieve the best useful effect possible.

Fan types JK-20D - JK-40D

The direct drive centrifugal fan types JK-20D - JK-40D are designed for material handling.

Equipped with self-cleaning impellers with backward-inclined blades and aerodynamic intake. The impellers are statically and dynamically balanced.

Max. operating temperature: 60°C

Number of blades are reduced by 2 for paper impeller.

Available in anti-spark version with stainless steel inlet and explosion-proof (Eex) motor.

Dimensions (D) for the inlet are external. Supplied smooth.

Specific dimensions for the outlet flanges can be found under “Flanges”.

The technical data for each type appears on the following pages.

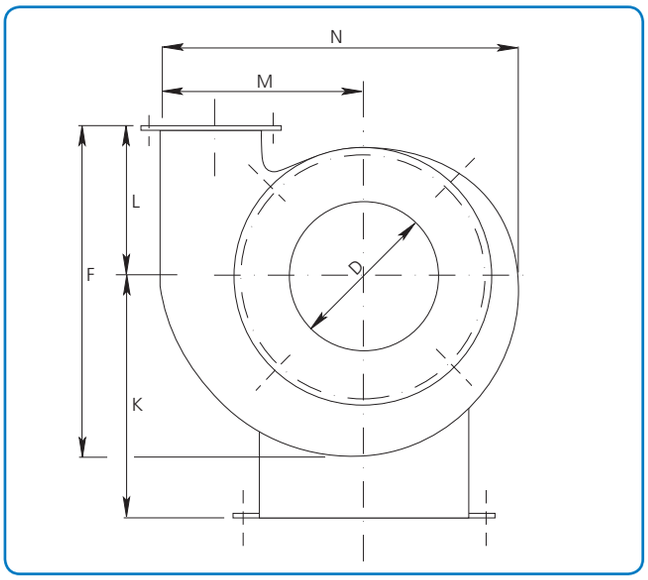

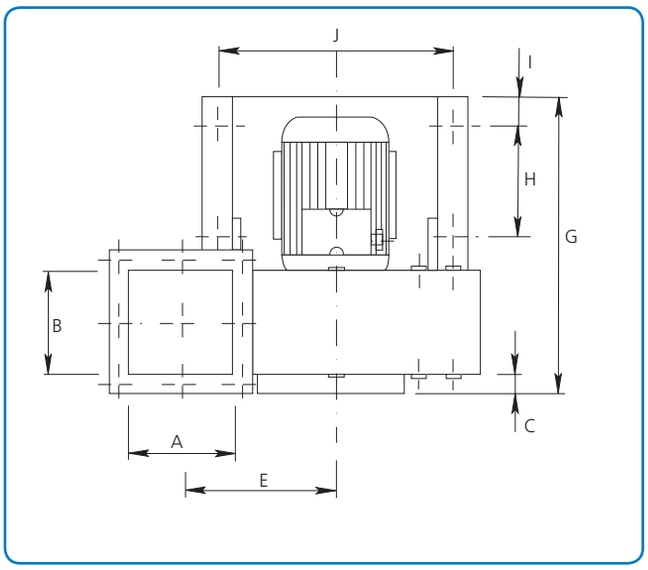

Steel plate dimensions in mm

Type	JK-20D - JK-30D	JK-35D - JK-40D
Impeller - standard	4	5
Impeller - reinforced	8	8
Fan housing - standard	3	3
Fan housing - reinforced	6	8

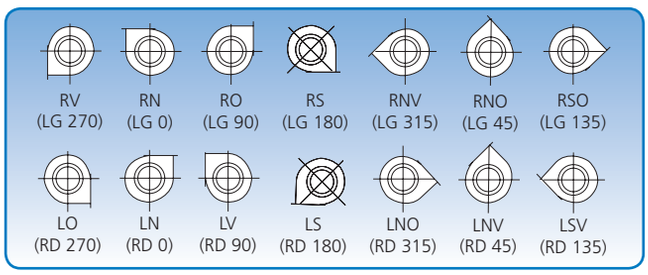

7 positions. The position illustrations are viewed from the inlet side.

Type	Dimensions														Weight without motor kg
	A mm	B mm	C mm	D mm	E mm	F mm	G mm	H mm	I mm	J mm	K mm	L mm	M mm	N mm	
JK-20D	140	140	33	200	207	448	400	141	40	317	325	198	284	500	27
JK-22D	166	166	29	225	220	500	475	192	40	326	340	224	310	552	34
JK-25D	186	186	30	250	248	582	530	210	50	356	384	273	348	618	45
JK-30D	206	206	36	300	267	631	577	230	50	356	415	293	377	676	50
JK-35D	225	225	45	350	320	670	735	360	50	390	515	293	438	770	73
JK-40D	251	251	55	400	330	740	795	400	50	488	500	326	462	824	88

Fan type JK-20D
Technical data

Motor: IP 55

Supplied with the following motors:

kW	hp	amp.	Weight of motor kg
1,1	1,5	4,3	10

Max. RPM:

Standard impeller: 3,200 RPM

Reinforced impeller: 2,840 RPM

Operating range:

Air volume: 750 – 1,800 m^3/h

Pressure: 110 – 155 mm WG

Power supply:

230 V - 50 Hz.

Construction:

B3 - motor mounted on foot.

Variants:

Fan can be powered by flange motor - type B5/B14.

Impeller:

No. of blades, standard: 8 pcs.

Diameter: ø295 mm

Height: 114 mm

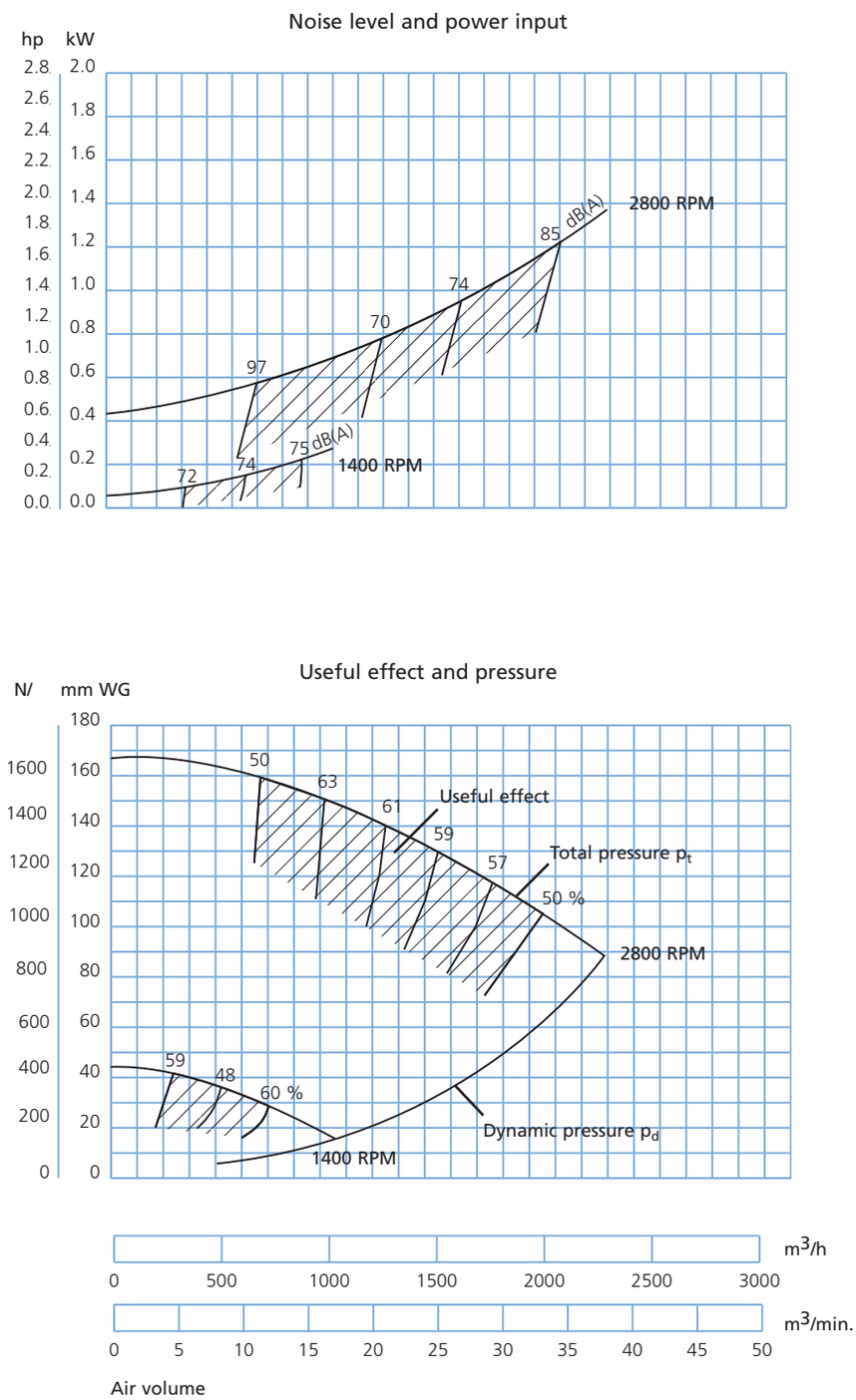

Fan type JK-22D
Technical data

Motor: IP 55

Supplied with the following motors:

kW	hp	amp.	Weight of motor kg
2,2	3,0	8,0	14

Max. RPM:

Standard impeller: 3,200 RPM

Reinforced impeller: 2,865 RPM

Operating range:

Air volume: 1,000 – 3,100 m^3/h

Pressure: 130 – 200 mm WG

Power supply:

230 V - 50 Hz.

Construction:

B3 - motor mounted on foot.

Variants:

Fan can be powered by flange motor - type B5/B14.

Impeller:

No. of blades, standard: 8 pcs.

Diameter: ø300 mm

Height: 139 mm

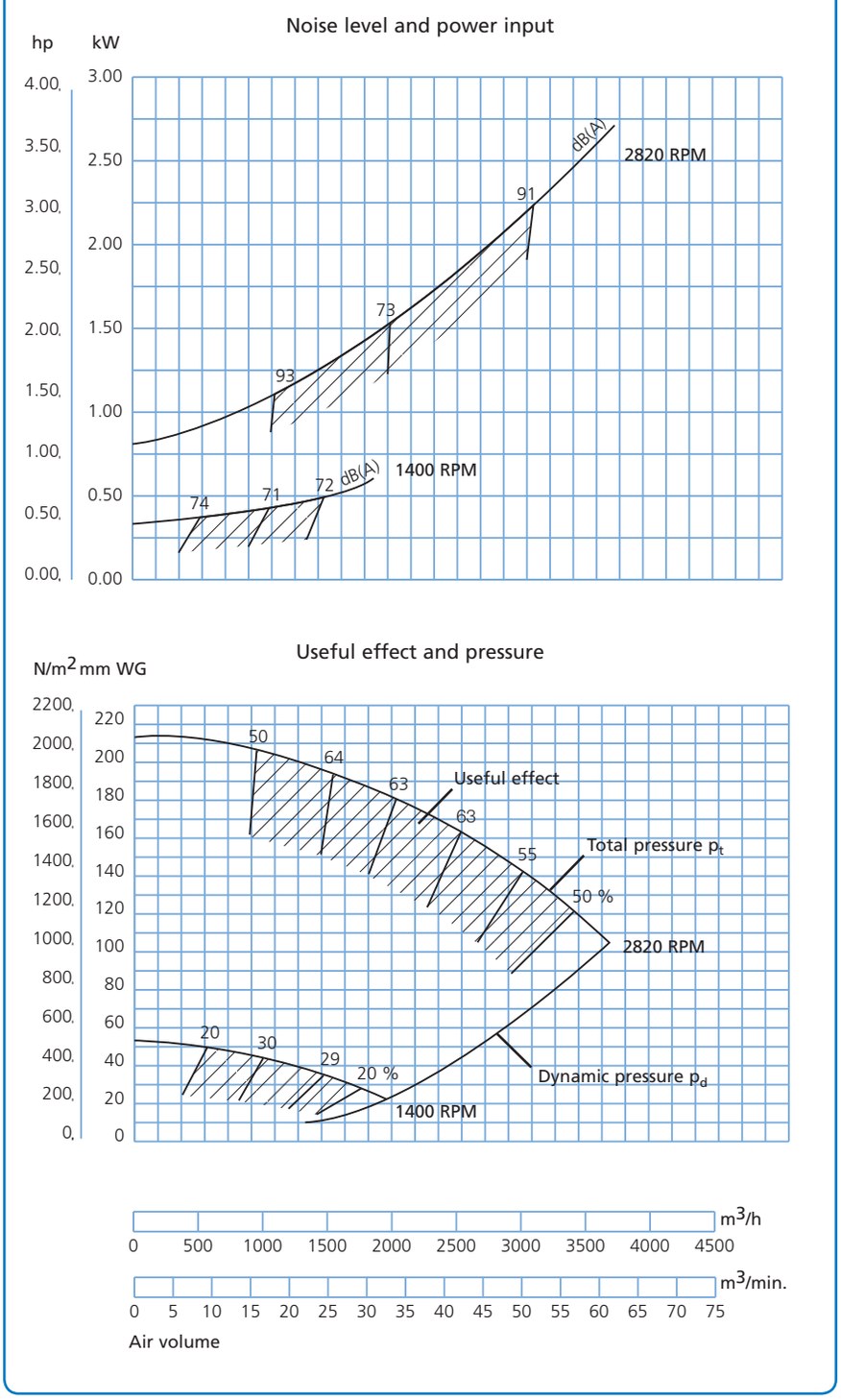

Fan type JK-25D
Technical data

Motor: IP 55

Supplied with the following motors:

kW	hp	amp.	Weight of motor kg
4,0	5,5	7,7	31

Max. RPM:

Standard impeller: 3,200 RPM

Reinforced impeller: 2,865 RPM

Operating range:

Air volume: 1,500 – 4,500 m^3/h

Pressure: 160 – 240 mm WG

Power supply:

400 V - 50 Hz.

Construction:

B3 - motor mounted on foot.

Variants:

Fan can be powered by flange motor - type B5/B14.

Impeller:

No. of blades, standard: 8 pcs.

Diameter: ø360 mm

Height: 143 mm

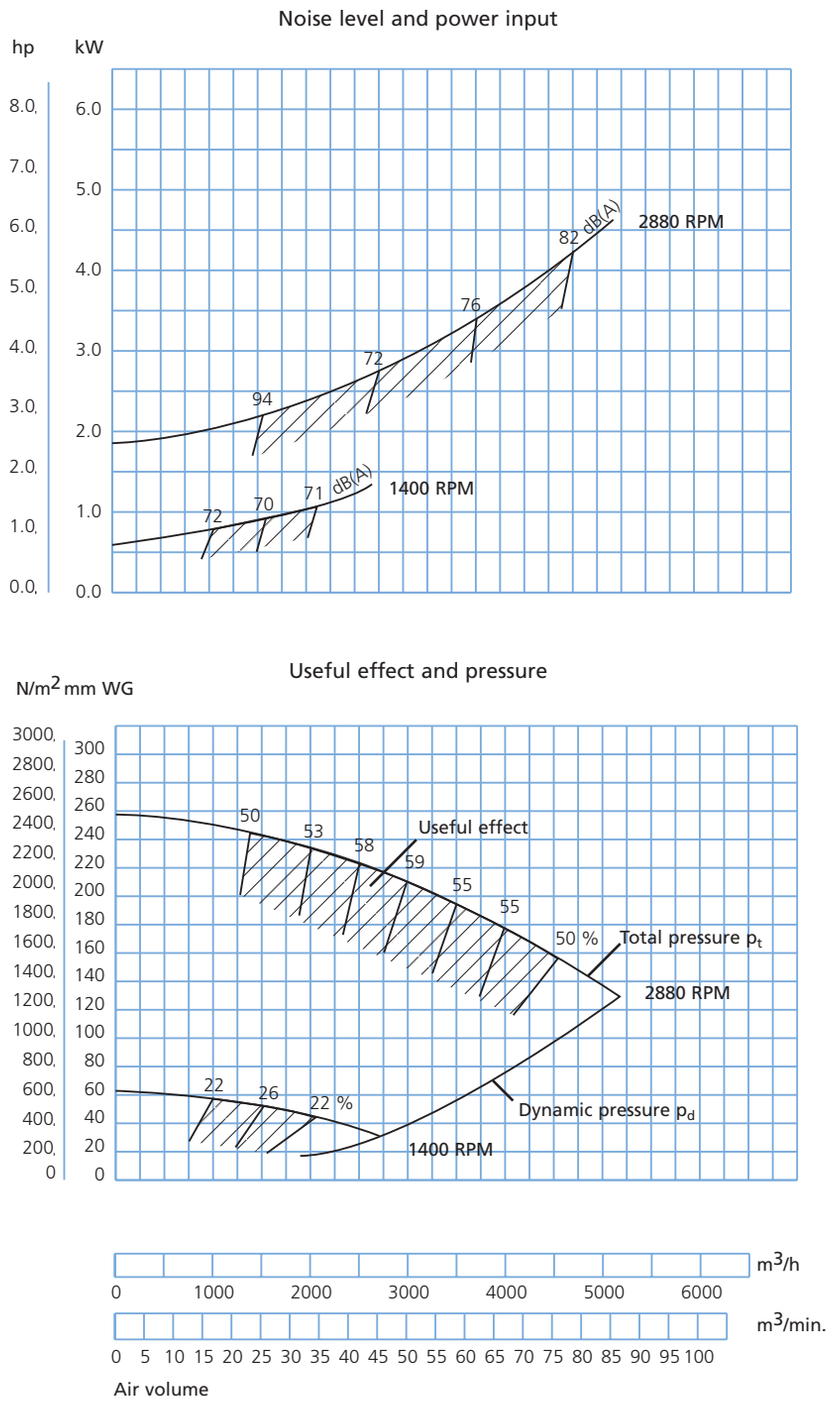

Fan type JK-30D
Technical data

Motor: IP 55

Supplied with the following motors:

kW	hp	amp.	Weight of motor kg
5,5	7,5	11,1	43
7,5	10,0	14,7	49

Max. RPM:

Standard impeller: 3,200 RPM

Reinforced impeller: 2,895 RPM

Operating range:

Air volume: 2,500 – 6,500 m^3/h

Pressure: 200 – 290 mm WG

Power supply:

400 V - 50 Hz.

Construction:

B3 - motor mounted on foot.

Variants:

Fan can be powered by flange motor - type B5/B14.

Impeller:

No. of blades, standard: 8 pcs.

Diameter: ø365 mm

Height: 154 mm

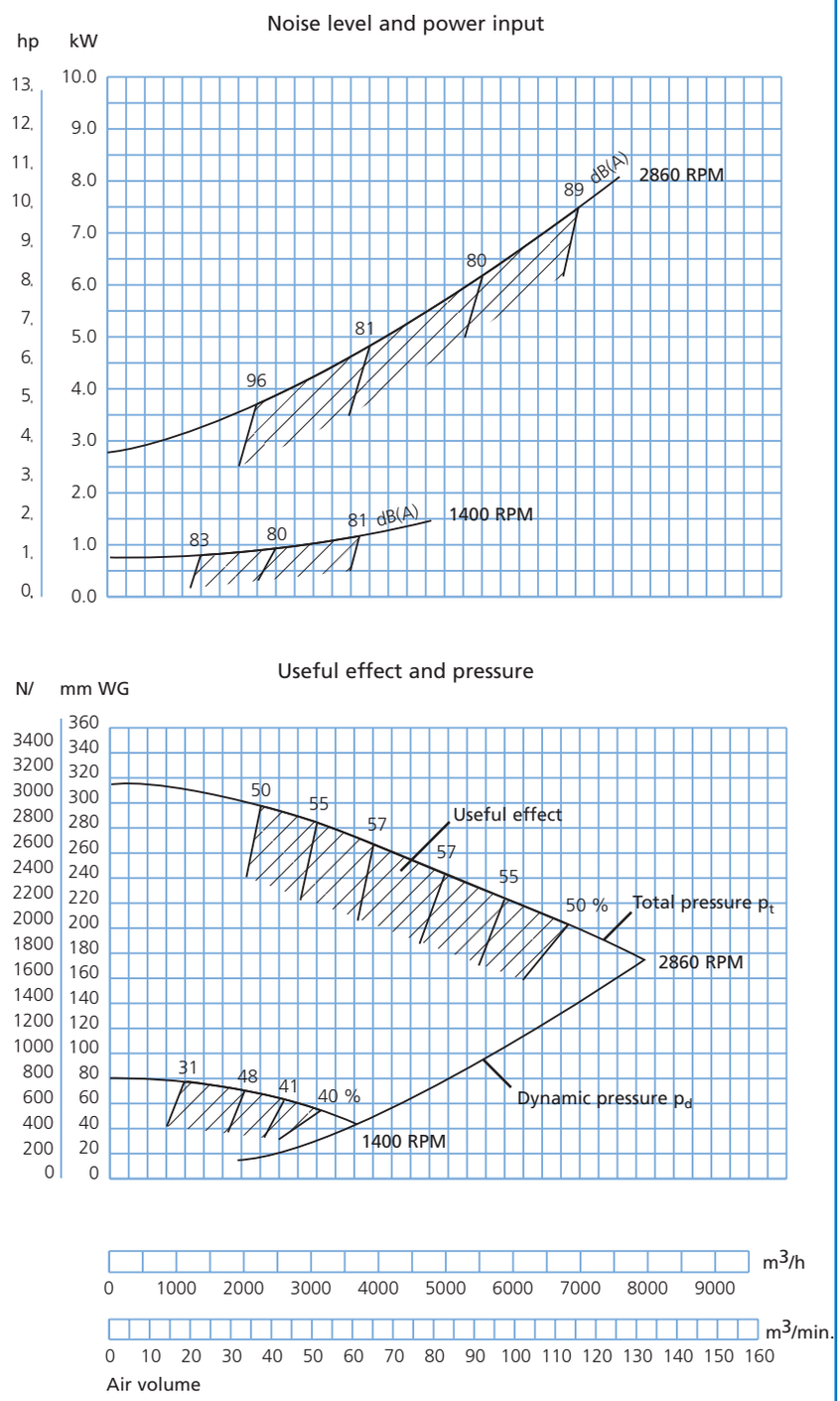

Fan type JK-35D
Technical data

Motor: IP 55

Supplied with the following motors:

kW	hp	amp.	Weight of motor kg
11,0	15,0	21,2	69
15,0	20,0	28,2	83

Max. RPM:

Standard impeller: 3,200 RPM

Reinforced impeller: 2,915 RPM

Operating range:

Air volume: 3,000 – 8,500 m^3/h

Pressure: 260 – 375 mm WG

Power supply:

400 V - 50 Hz.

Construction:

B3 - motor mounted on foot.

Variants:

Fan can be powered by flange motor - type B5/B14.

Impeller:

No. of blades, standard: 8 pcs.

Diameter: ø450 mm

Height: 185 mm

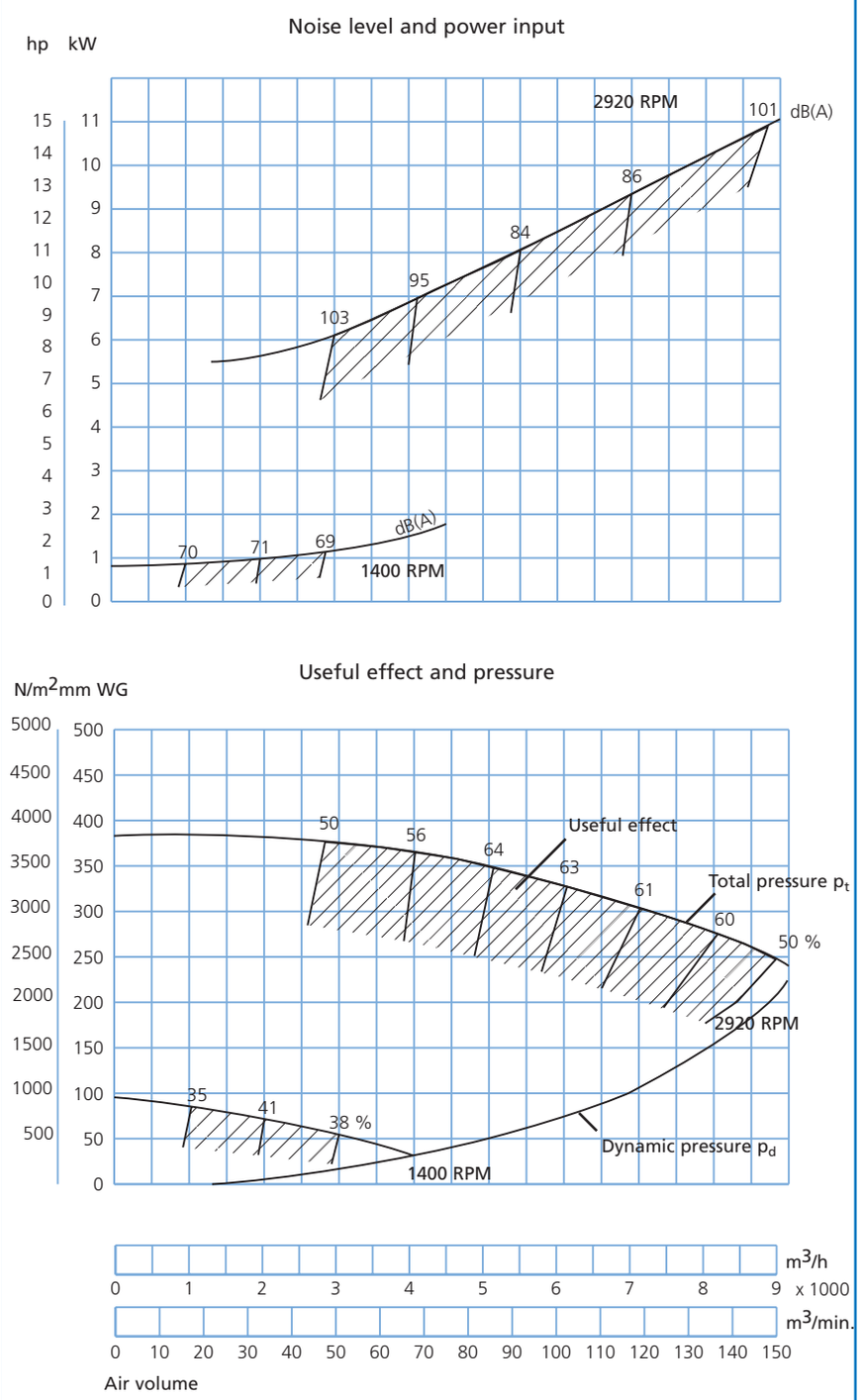

Fan type JK-40D
Technical data

Motor: IP 55

Supplied with the following motors:

kW	hp	amp.	Weight of motor kg
18,5	25,0	34,4	87
22,0	30,0	40,0	165

Max. RPM:

Standard impeller: 3,200 RPM

Reinforced impeller: 2,930 RPM

Operating range:

Air volume: 5,000 – 11,000 m^3/h

Pressure: 340 – 440 mm WG

Power supply:

400 V - 50 Hz.

Construction:

B3 - motor mounted on foot.

Variants:

Fan can be powered by flange motor - type B5/B14.

Impeller:

No. of blades, standard: 8 pcs.

Diameter: ø500 mm

Height: 185 mm

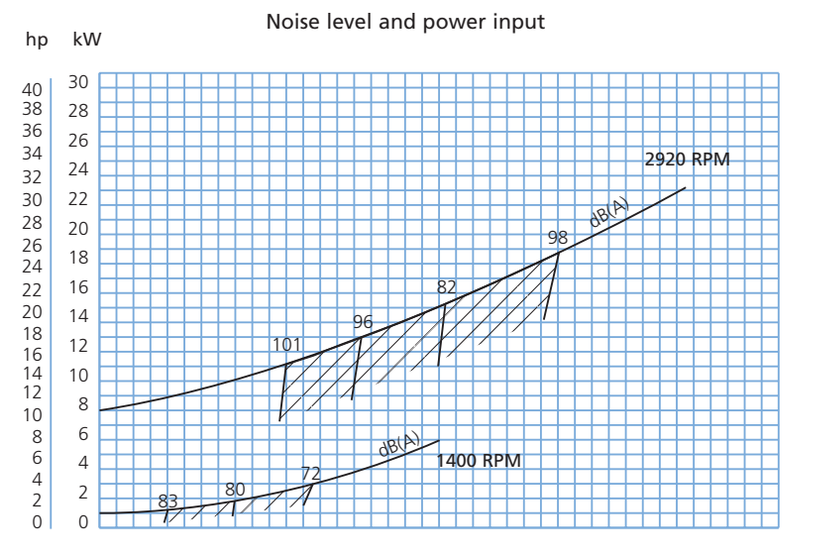

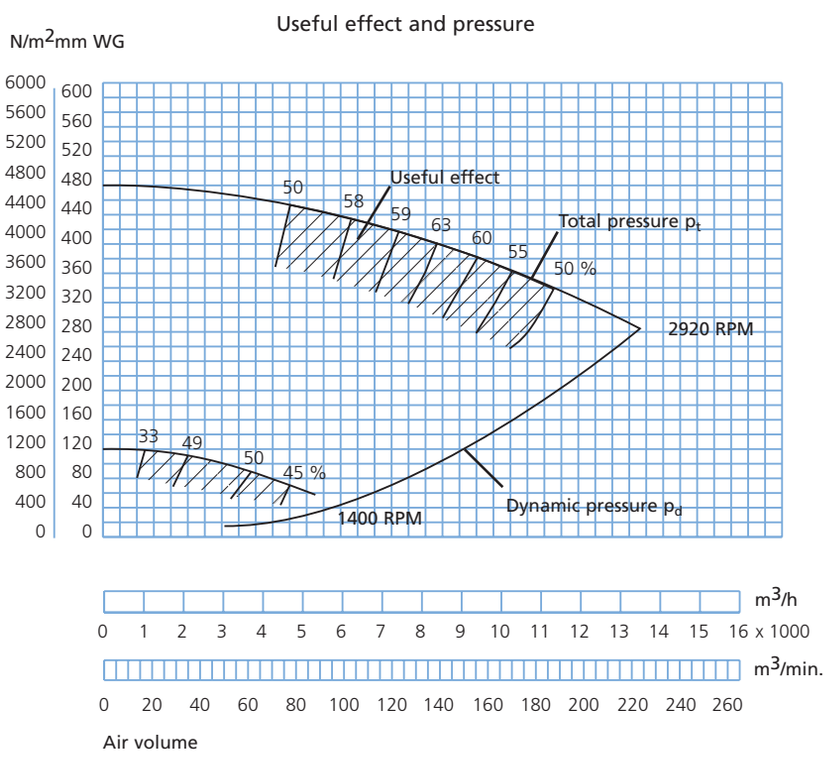

Fan types JK-30K - JK-75K

The indirect drive centrifugal fan types JK-30K - JK-75K are designed for material handling.

Equipped with self-cleaning impellers with backward-inclined blades and aerodynamic intake. The impellers are statically and dynamically balanced.

The pulleys are shaft-mounted with taperlock bushing, allowing easy replacement for changed fan speed.

Max. operating temperature: 60°C
With cooling wings: Up to 200°C

Number of blades are reduced by 2 for paper impeller.

Available in anti-spark version with stainless steel inlet and explosion-proof (Eex) motor.

Dimensions (D) for the inlet are external. Supplied smooth.

Belt drive is anti-static.

Specific dimensions for the outlet flanges can be found under “Flanges”.

The technical data for each type appears on the following pages.

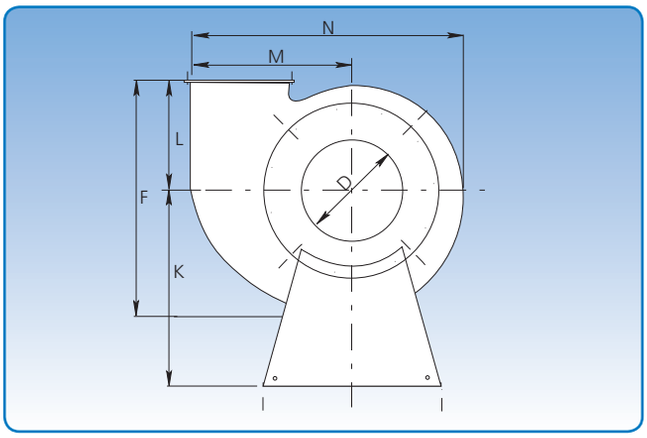

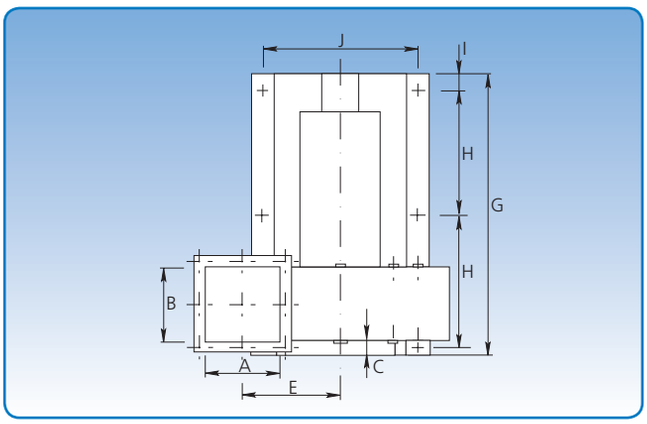

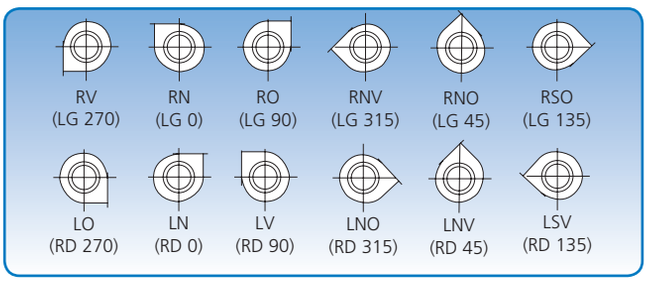

6 positions. The position illustrations are viewed from the inlet side.

Steel plate dimensions in mm

Type	JK-30K	JK-40K - JK-45K	JK-55K - JK-75K
Impeller - standard	4	5	6
Impeller - reinforced	8	8	8
Fan housing - standard	3	3	4

Type	Dimensions														Weight without motor kg
	A mm	B mm	C mm	D mm	E mm	F mm	G mm	H mm	I mm	J mm	K mm	L mm	M mm	N mm	
JK-30K	206	206	36	300	267	631	860	370	55	430	550	293	377	676	79
JK-40K	250	250	55	400	330	740	1110	494	55	550	650	326	462	824	200
JK-45K	339	339	55	450	395	885	1207	528	55	672	720	375	570	1013	300
JK-55K	418	418	60	550	500	1095	1540	700	59	825	955	468	715	1250	532
JK-75K	700	550	60	750	442	1310	1875	855	70	850	1125	600	800	1410	597

Fan type JK-30K
Technical data

Motor: IP 55

Supplied with the following motors:

kW	hp	amp.	Weight of motor kg
5,5	7,5	11,1	43
7,5	10,0	14,7	49

Max. RPM:

Standard impeller: 3,575 RPM

Reinforced impeller: 2,700 RPM

Operating range:

Air volume: 2,800 – 6,500 m^3/h

Pressure: 60 – 320 mm WG

Power supply:

400 V - 50 Hz.

Construction:

B3 - motor mounted on foot.

Impeller:

No. of blades, standard: 8 pcs.

Diameter: ø410 mm

Height: 154 mm

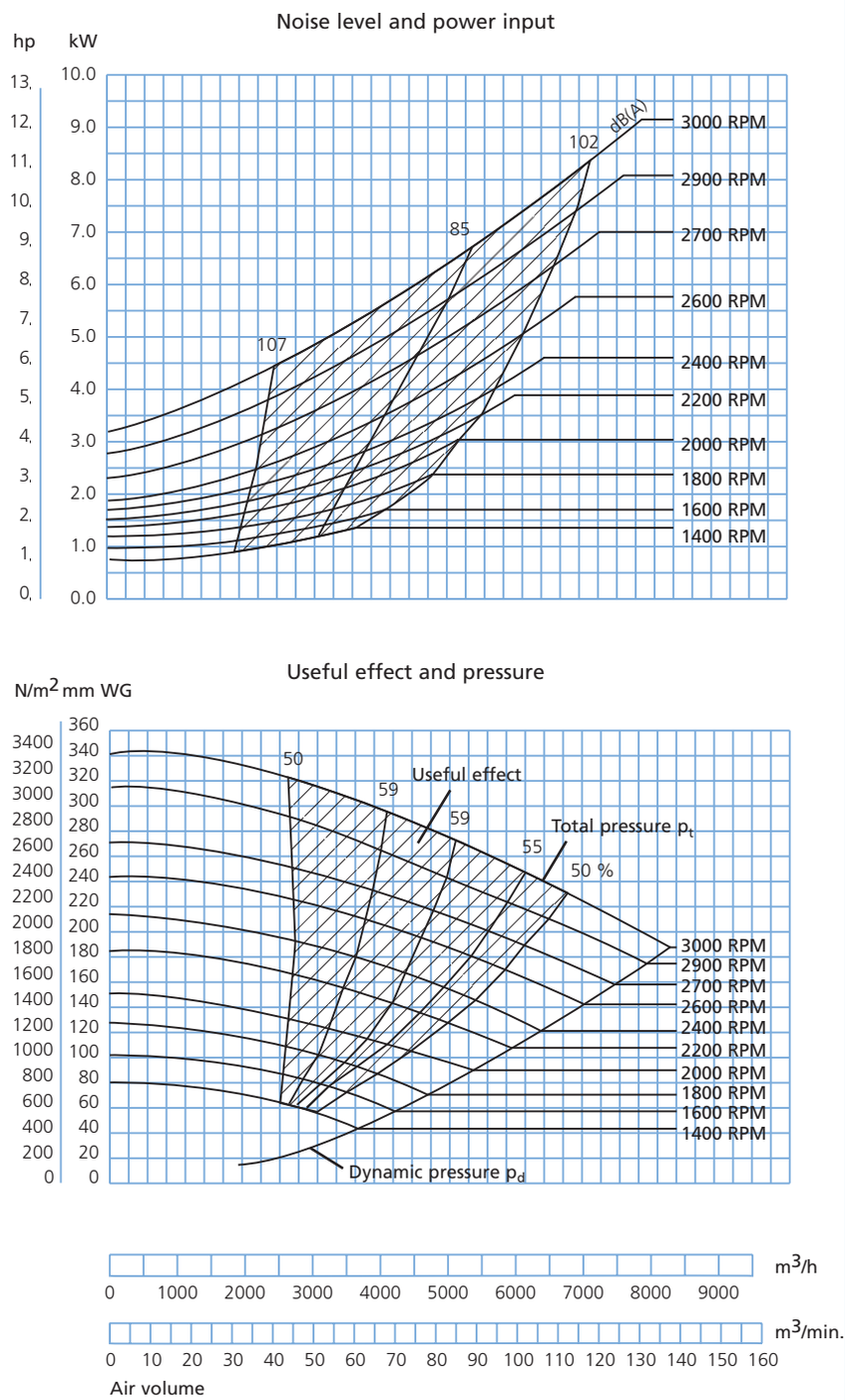

Fan type JK-40K
Technical data

Motor: IP 55

Supplied with the following motors:

kW	hp	amp.	Weight of motor kg
11,0	15,0	21,2	69
15,0	20,0	28,2	83

Max. RPM:

Standard impeller: 3,435 RPM

Reinforced impeller: 2,600 RPM

Operating range:

Air volume: 5,000 – 11,000 m^3/h

Pressure: 140 – 540 mm WG

Power supply:

400 V - 50 Hz.

Construction:

B3 - motor mounted on foot.

Impeller:

No. of blades, standard: 8 pcs.

Diameter: ø500 mm

Height: 189 mm

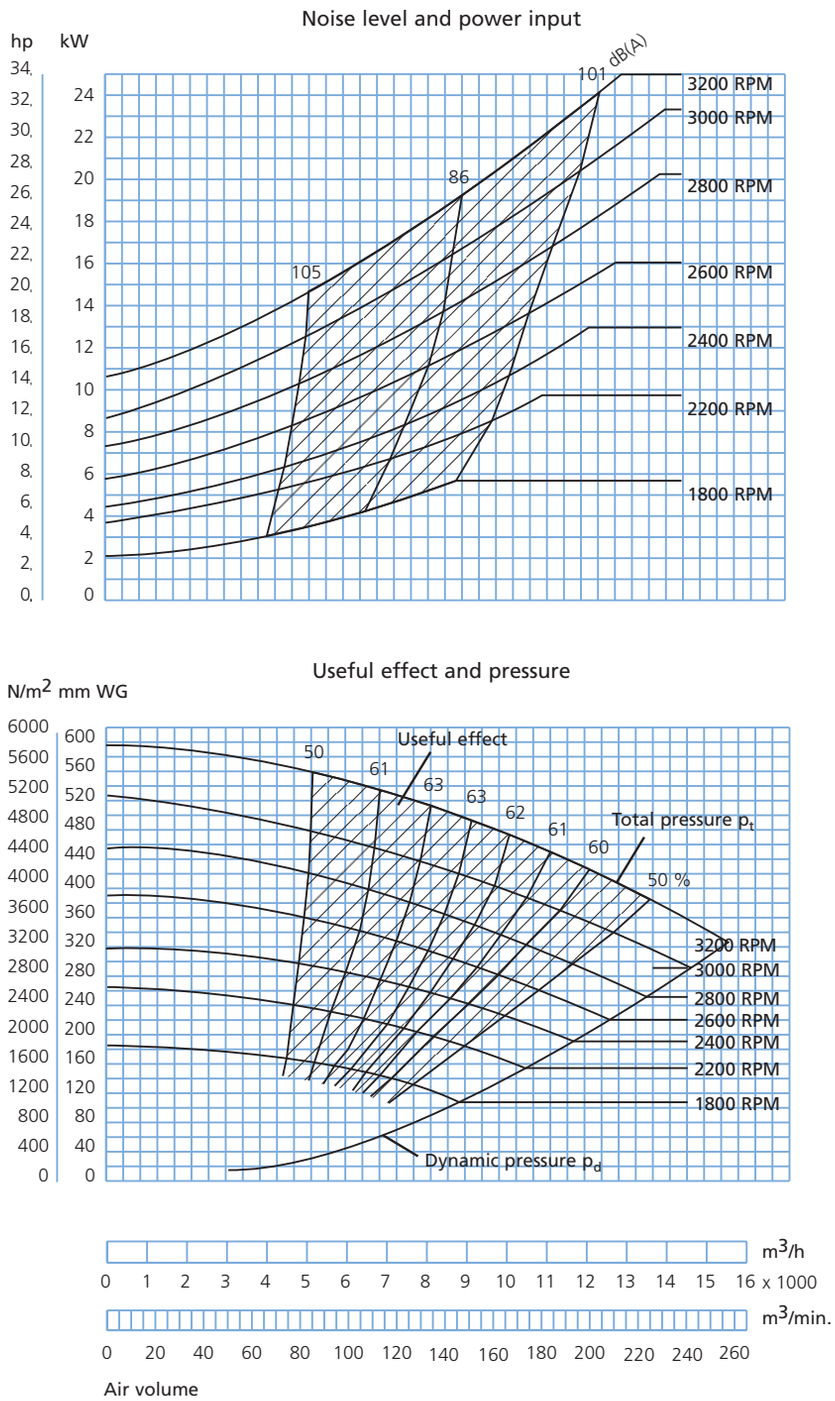

Fan type JK-45K
Technical data

Motor: IP 55

Supplied with the following motors:

kW	hp	amp.	Weight of motor kg
18,5	25,0	34,4	87
22,0	30,0	40,0	165
30,0	40,0	52,5	240

Max. RPM:

Standard impeller: 2,450 RPM

Reinforced impeller: 1,850 RPM

Operating range:

Air volume: 6,000 – 20,000 m^3/h

Pressure: 180 – 520 mm WG

Power supply:

400 V - 50 Hz.

Construction:

B3 - motor mounted on foot.

Impeller:

No. of blades, standard: 8 pcs.

Diameter: ø650 mm

Height: 259 mm

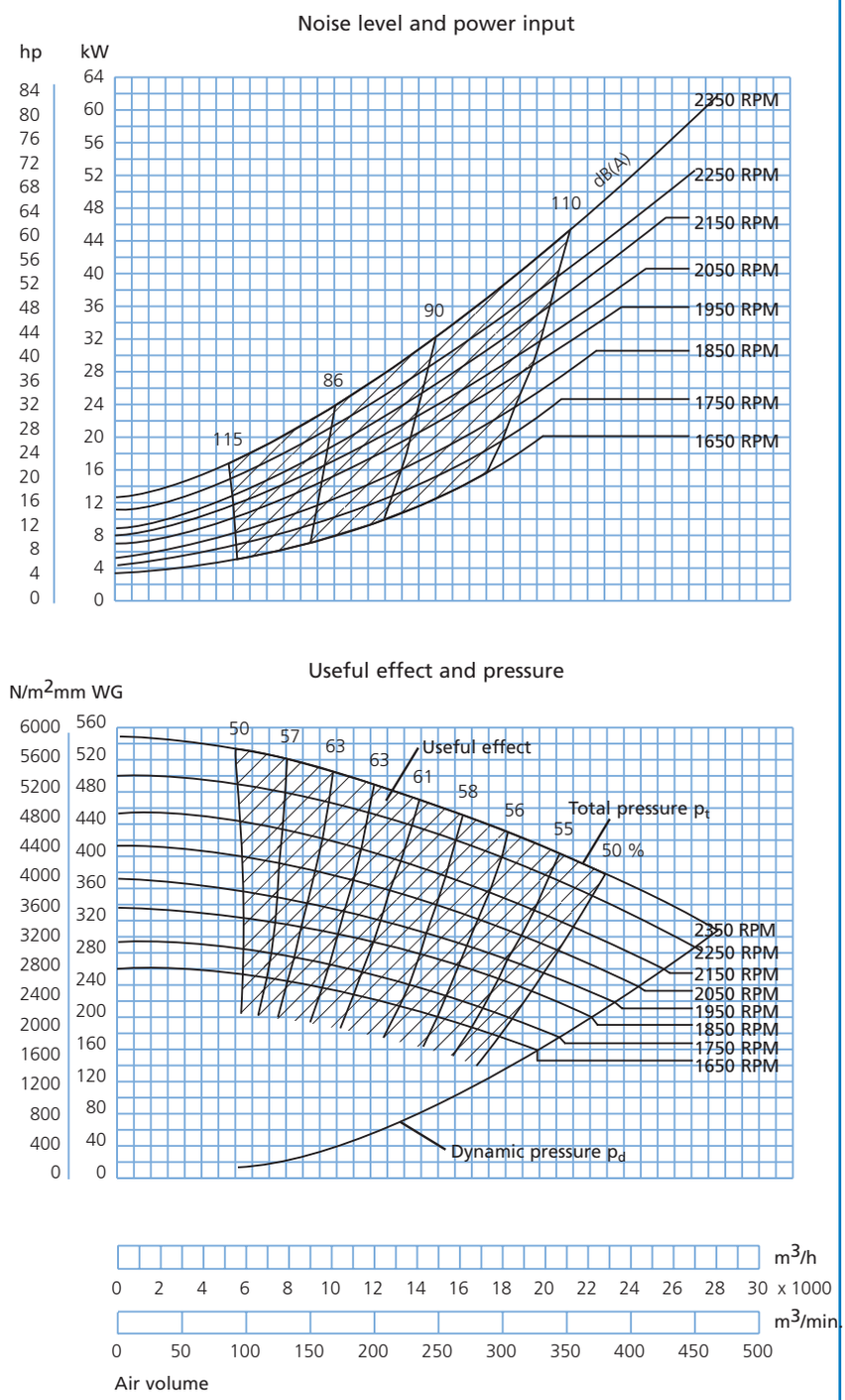

Fan type JK-55K
Technical data

Motor: IP 55

Supplied with the following motors:

kW	hp	amp.	Weight of motor kg
30,0	40,0	53	230
37,0	50,0	67	300
45,0	60,0	80	330
55,0	75,0	97	435

Max. RPM:

Standard impeller: 2,350 RPM

Reinforced impeller: 1,750 RPM

Operating range:

Air volume: 8,000 – 29,000 m^3/h

Pressure: 160 – 600 mm WG

Power supply:

400 V - 50 Hz.

Construction:

B3 - motor mounted on foot.

Impeller:

No. of blades, standard: 8 pcs.

Diameter: ø800 mm

Height: 320 mm

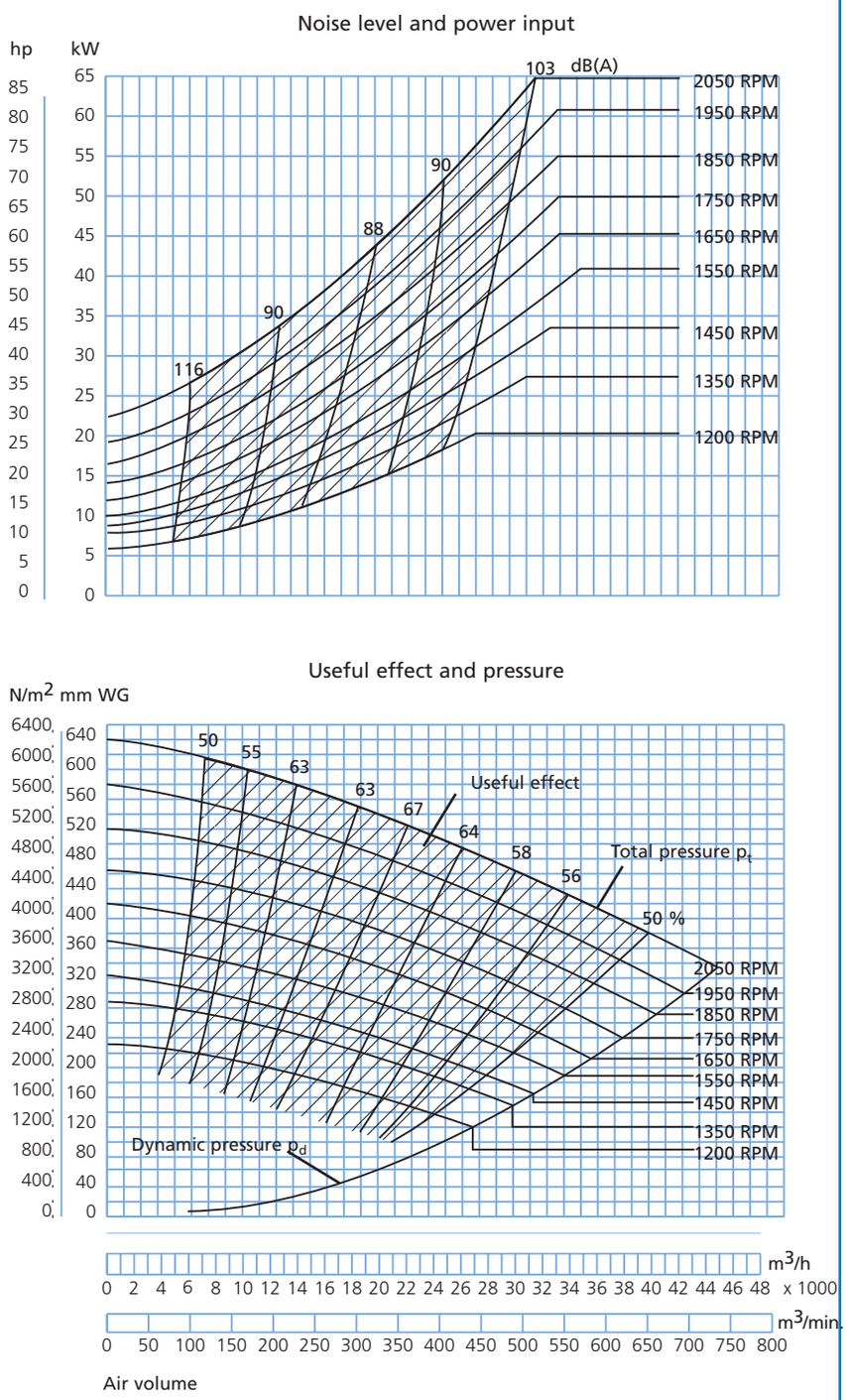

Fan type JK-75K
Technical data

Motor: IP 55

Supplied with the following motors:

kW	hp	amp.	Weight of motor kg
55,0	75,0	97,0	435
75,0	103,0	133,0	610

Max. RPM:

Standard impeller: 2,050 RPM

Reinforced impeller: 1,450 RPM

Operating range:

Air volume: 25,000 – 40,000 m^3/h

Pressure: 200 – 370 mm WG

Power supply:

400 V - 50 Hz.

Construction:

B3 - motor mounted on foot.

Impeller:

No. of blades, standard: 8 pcs.

Diameter: ø430 mm

Height: 890 mm

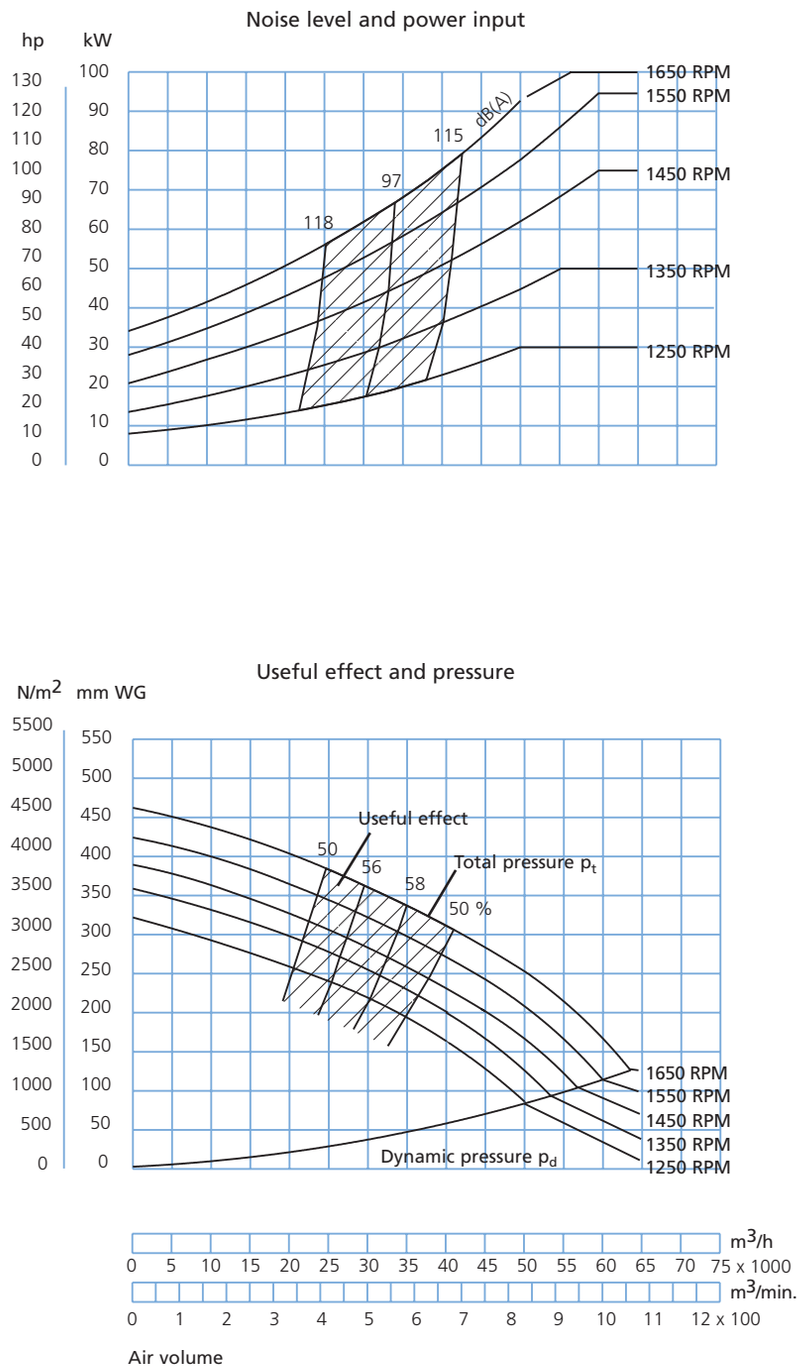

Fan types T-200K and T-300K

The indirect drive centrifugal fan types T-200K and T-300K are designed for concentrated material handling over long distances.

Equipped with self-cleaning impellers with backward-inclined blades and aerodynamic intake. The impellers are statically and dynamically balanced.

The pulleys are shaft-mounted with taperlock bushing, allowing easy replacement for changed fan speed.

Max. operating temperature: 60°C
With cooling wings: Up to 200°C

Number of blades reduced by 2 for paper impeller.

Available in anti-spark version with stainless steel inlet and explosion-proof (Eex) motor.

Dimensions (D) for the inlet are external. Supplied smooth.

Belt drive is anti-static.

Specific dimensions for the outlet flanges can be found under “Flanges”.

The technical data for each type appears on the following pages.

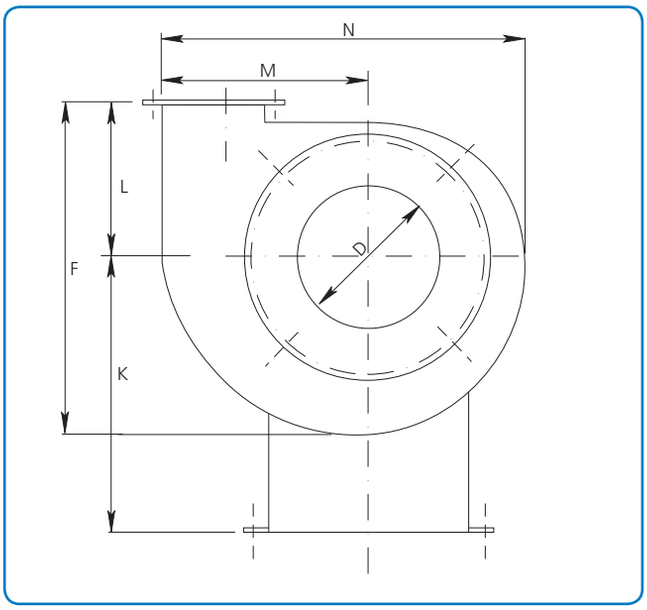

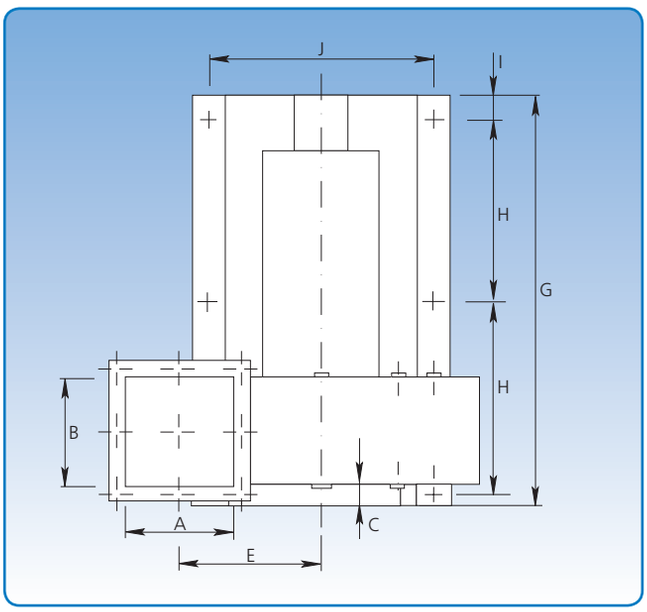

Steel plate dimensions in mm

Type	T-200K - T-300K
Impeller - standard	5
Impeller - reinforced	8
Fan housing - standard	3
Fan housing - reinforced	8

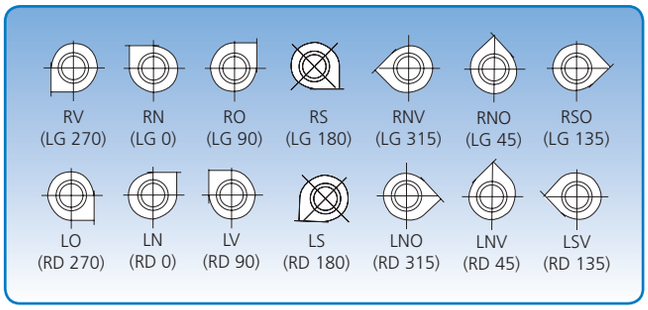

7 positions. The position illustrations are viewed from the inlet side.

Type	Dimensions														Weight without motor kg
	A mm	B mm	C mm	D mm	E mm	F mm	G mm	H mm	I mm	J mm	K mm	L mm	M mm	N mm	
T-200K	166	166	100	200	357	770	1034	599	55	672	720	370	440	820	217
T-300K	326	226	75	300	380	906	1145	665	55	703	860	418	548	986	315

Fan type T-200K
Technical data

Motor: IP 55

Supplied with the following motors:

kW	hp	amp.	Weight of motor kg
15,0	20,0	27,5	83
18,5	25,0	34,4	87
22,0	30,0	40,0	165

Max. RPM:

Standard impeller: 2,900 RPM

Reinforced impeller: 2,250 RPM

Operating range:

Air volume: 2,000 – 5,500 m^3/h

Pressure: 250 – 750 mm WG

Power supply:

400 V - 50 Hz.

Construction:

B3 - motor mounted on foot.

Impeller:

No. of blades, standard: 8 pcs.

Diameter: ø650 mm

Height: 120 mm

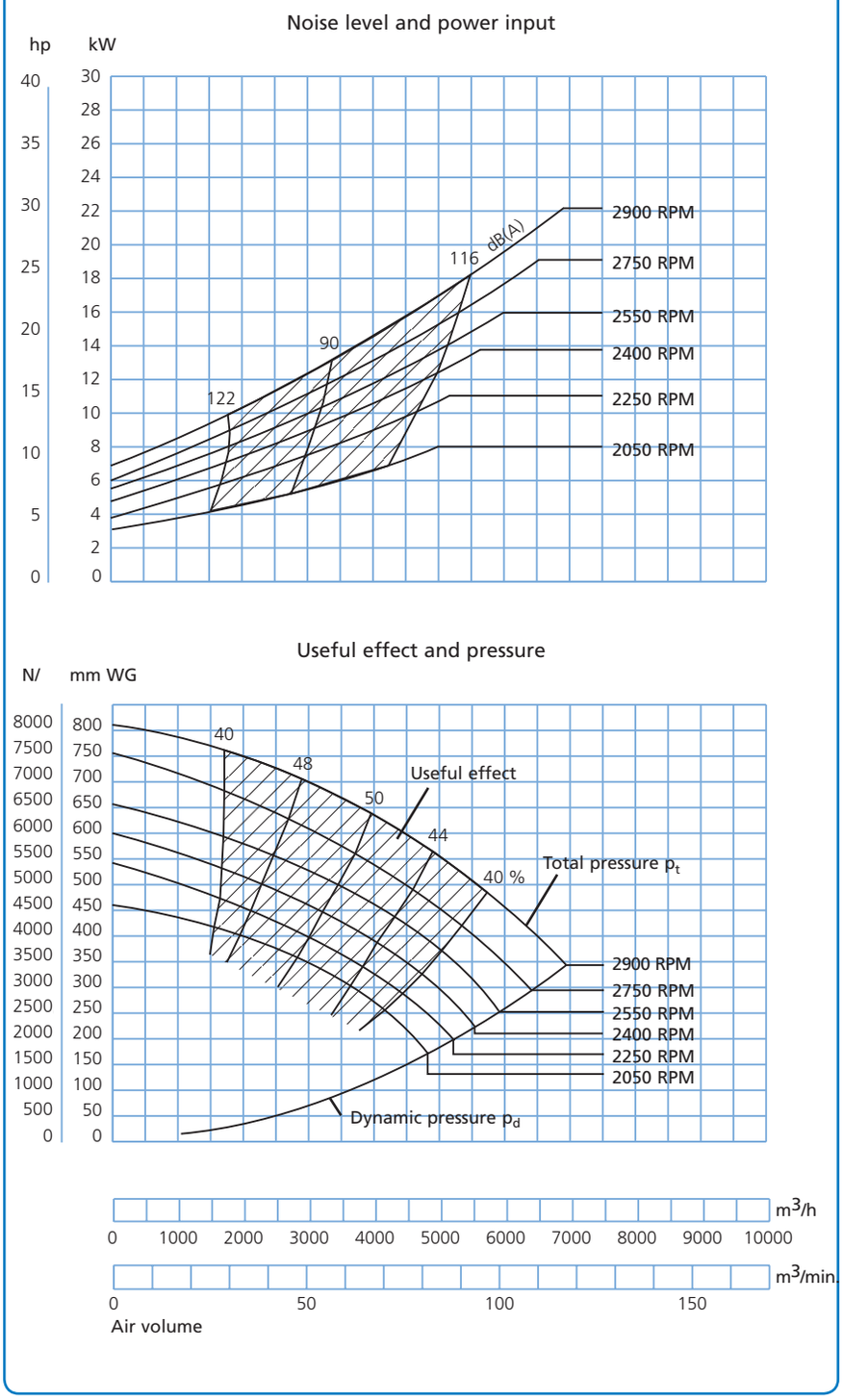

Fan type T-300K
Technical data

Motor: IP 55

Supplied with the following motors:

kW	hp	amp.	Weight of motor kg
22,0	30,0	40	165
30,0	40,0	53	240
37,0	50,0	64	260

Max. RPM:

Standard impeller: 2,900 RPM

Reinforced impeller: 2,400 RPM

Operating range:

Air volume: 5,000 – 13,000 m^3/h

Pressure: 350 – 1,000 mm WG

Power supply:

400 V - 50 Hz.

Construction:

B3 - motor mounted on foot.

Impeller:

No. of blades, standard: 8 pcs.

Diameter: ø130 mm

Height: 765 mm

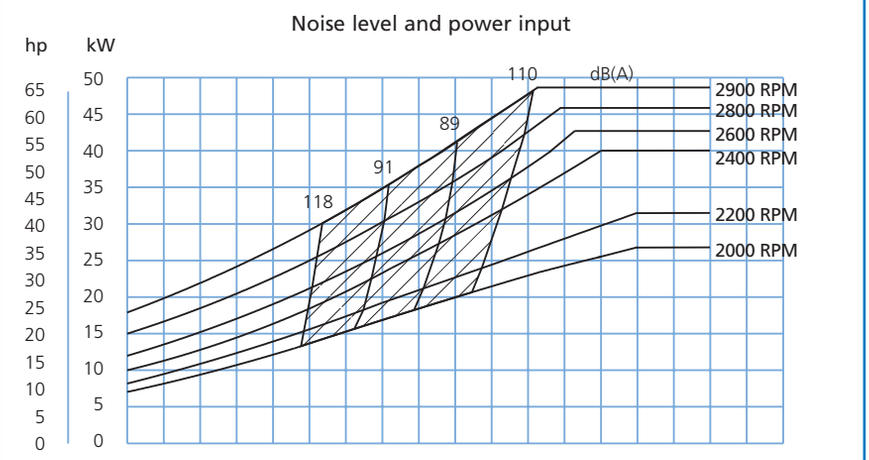

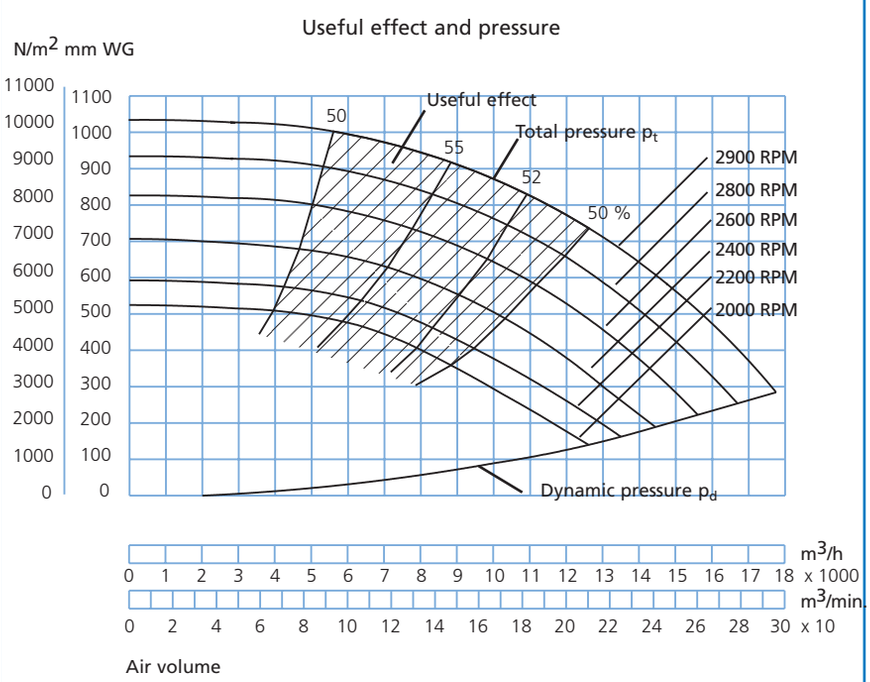

Fan types JK-30MTD and JK-40MTD

The direct drive centrifugal fan types JK-30MTD and JK-40MTD are designed for transport of clean air.

Equipped with self-cleaning impellers with backward-inclined blades and aerodynamic intake. The impellers are statically and dynamically balanced.

Max. operating temperature: 60°C

Available in anti-spark version with stainless steel inlet and explosion-proof (Eex) motor.

Dimensions (D) for the inlet are external. Supplied with flange as standard.

Specific dimensions for the outlet and inlet flanges can be found under "Flanges".

The technical data for each type appears on the following pages.

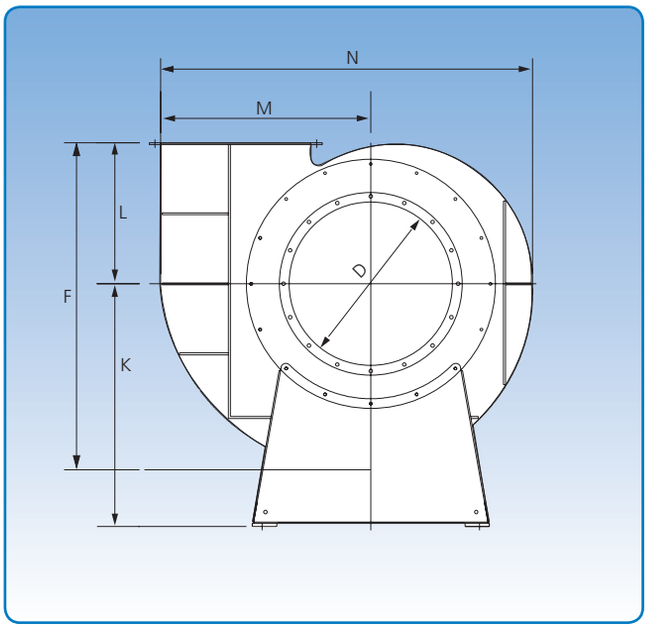

Steel plate dimensions in mm

Type	JK-30MTD - JK-40MTD
Impeller - standard	3
Fan housing - standard	3

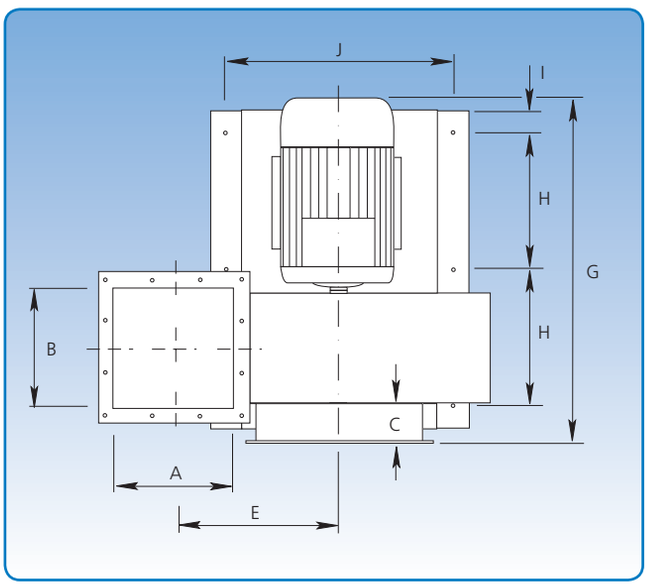

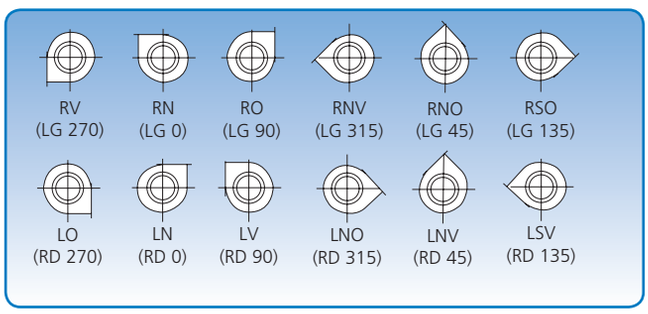

6 positions. The position illustrations are viewed from the inlet side.

Type	Dimensions														Weight without motor kg
	A mm	B mm	C mm	D mm	E mm	F mm	G mm	H mm	I mm	J mm	K mm	L mm	M mm	N mm	
JK-30MTD	250	250	75	300	318	650	723	275	50	430	550	275	450	775	131
JK-40MTD	350	350	75	400	368	775	879	370	50	550	650	325	550	925	202

Fan type JK-30MTD
Technical data

Motor: IP 55

Supplied with the following motors:

kW	hp	amp.	Weight of motor kg
3,0	4,0	6,1	28
4,0	5,5	7,7	39

Max. RPM:

Standard impeller: 3,575 RPM

Operating range:

Air volume: 2,000 – 6,000 m^3/h

Pressure: 120 – 240 mm WG

Power supply:

230 V - 50 Hz.

Construction:

B3 - motor mounted on foot.

Variants:

Fan can be powered by flange motor - type B5/B14.

Impeller:

No. of blades, standard: 8 pcs.

Diameter: ø405 mm

Height: 169 mm

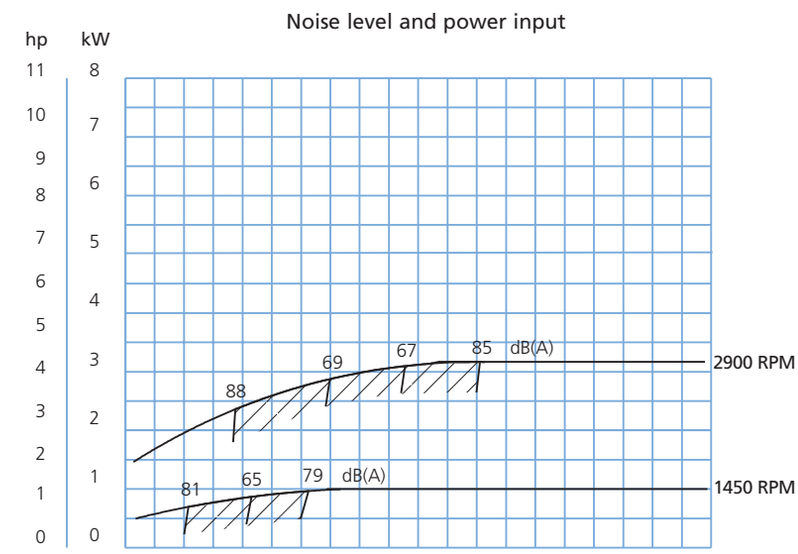

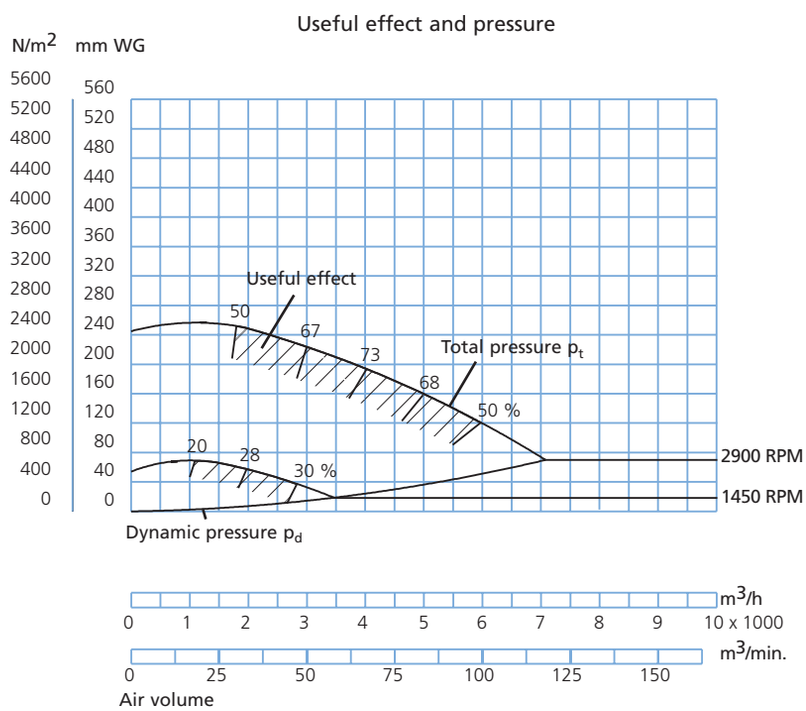

Fan type JK-40MTD
Technical data

Motor: IP 55

Supplied with the following motors:

kW	hp	amp.	Weight of motor kg
11,0	15,0	21,2	69
15,0	20,0	28,2	83
18,5	25,0	34,4	87

Max. RPM:

Standard impeller: 3,435 RPM

Operating range:

Air volume: 2,500 – 14,000 m^3/h

Pressure: 120 – 380 mm WG

Power supply:

400 V - 50 Hz.

Construction:

B3 - motor mounted on foot.

Variants:

Fan can be powered by flange motor - type B5/B14.

Impeller:

No. of blades, standard: 8 pcs.

Diameter: ø505 mm

Height: 209 mm

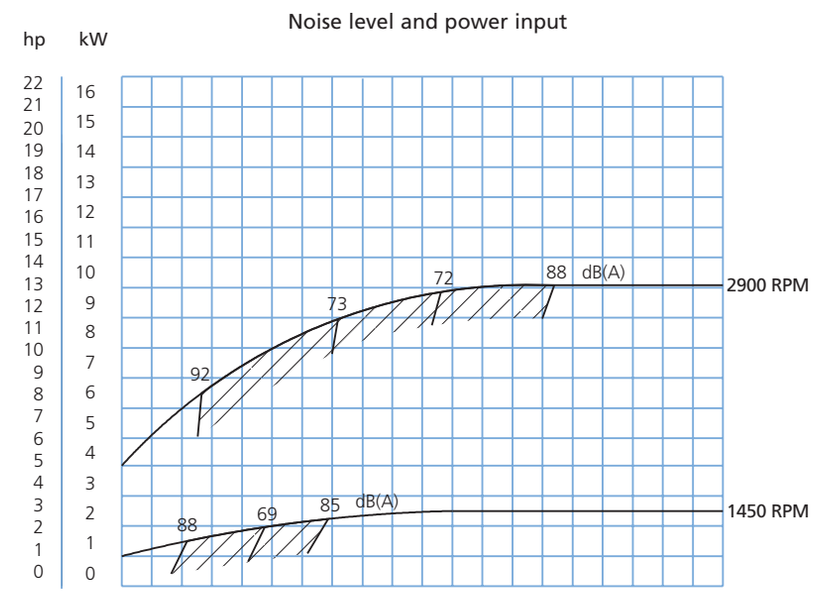

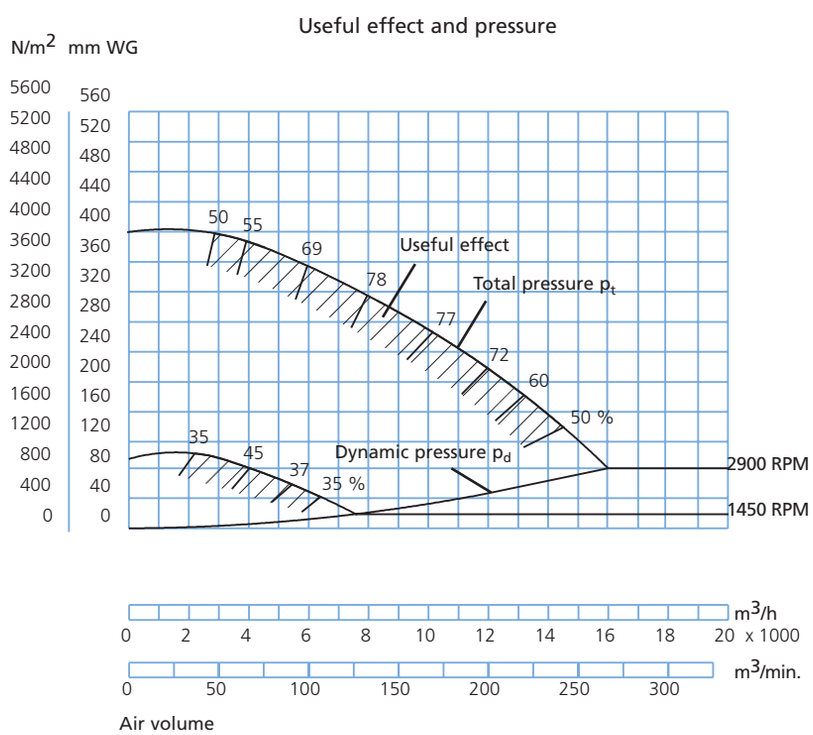

Fan types JK-30MT - JK-100MT

The indirect drive centrifugal fan types JK-30MT - JK-100MT are designed for transport of clean air.

Equipped with self-cleaning impellers with backward-inclined blades and aerodynamic intake. The impellers are statically and dynamically balanced.

The pulleys are shaft-mounted with taperlock bushing, allowing easy replacement for changed fan speed.

Max. operating temperature: 60°C
With cooling wings: Up to 200°C

Available in anti-spark version with stainless steel inlet and explosion-proof (Eex) motor.

Dimensions (D) for the inlet are external. Supplied with flange as standard.

Belt drive is anti-static.

Specific dimensions for outlet and inlet flanges can be found under "Flanges".

The technical data for each type appears on the following pages.

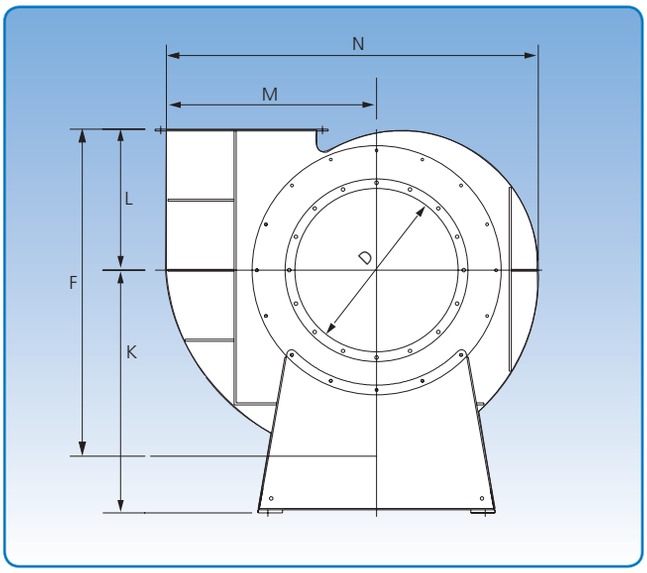

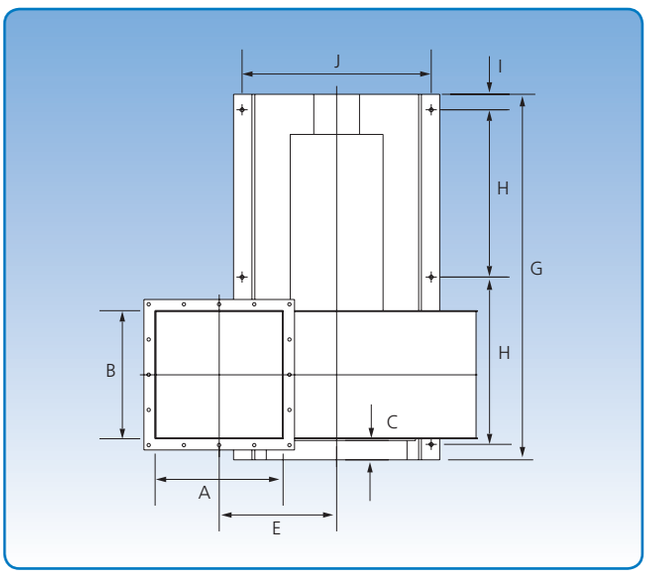

Steel plate dimensions in mm

Type	JK-30MT - JK-60MT	JK-70MT - JK-90MT	JK-100MT
Impeller - standard	3	4	5
Fan housing - standard	3	3	3

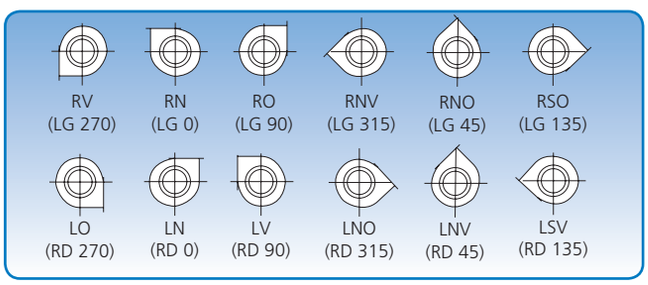

6 positions. The position illustrations are viewed from the inlet side.

Type	Dimensions														Weight without motor kg
	A mm	B mm	C mm	D mm	E mm	F mm	G mm	H mm	I mm	J mm	K mm	L mm	M mm	N mm	
JK-30MT	250	250	75	300	318	650	880	370	55	430	550	275	450	775	142
JK-40MT	350	350	75	400	368	775	1128	494	55	550	650	325	550	925	226
JK-50MT	455	455	75	500	418	1000	1328	587	55	672	750	436	650	1150	343
JK-60MT	505	505	75	600	543	1186	1563	700	59	825	955	486	800	1400	554
JK-70MT	605	605	75	700	593	1360	1895	855	70	850	1125	566	900	1570	703
JK-80MT	705	705	75	800	643	1490	1995	905	70	850	1125	625	1000	1727	788
JK-90MT	805	805	75	900	723	1670	2310	1030	100	1070	1325	700	1130	1940	1189
JK-100MT	905	905	75	1000	793	1865	2410	1080	100	1070	1425	770	1250	2175	1295

Fan type JK-30MT
Technical data

Motor: IP 55

Supplied with the following motors:

kW	hp	amp.	Weight of motor kg
3,0	4,0	6,1	28
4,0	5,5	7,7	39
5,5	7,5	11,1	43
7,5	10,0	14,7	49

Max. RPM:

Standard impeller: 3,575 RPM

Operating range:

Air volume: 2,500 – 8,000 m^3/h

Pressure: 80 – 370 mm WG

Power supply:

400 V - 50 Hz.

Construction:

B3 - motor mounted on foot.

Impeller:

No. of blades, standard: 8 pcs.

Diameter: ø405 mm

Height: 169 mm

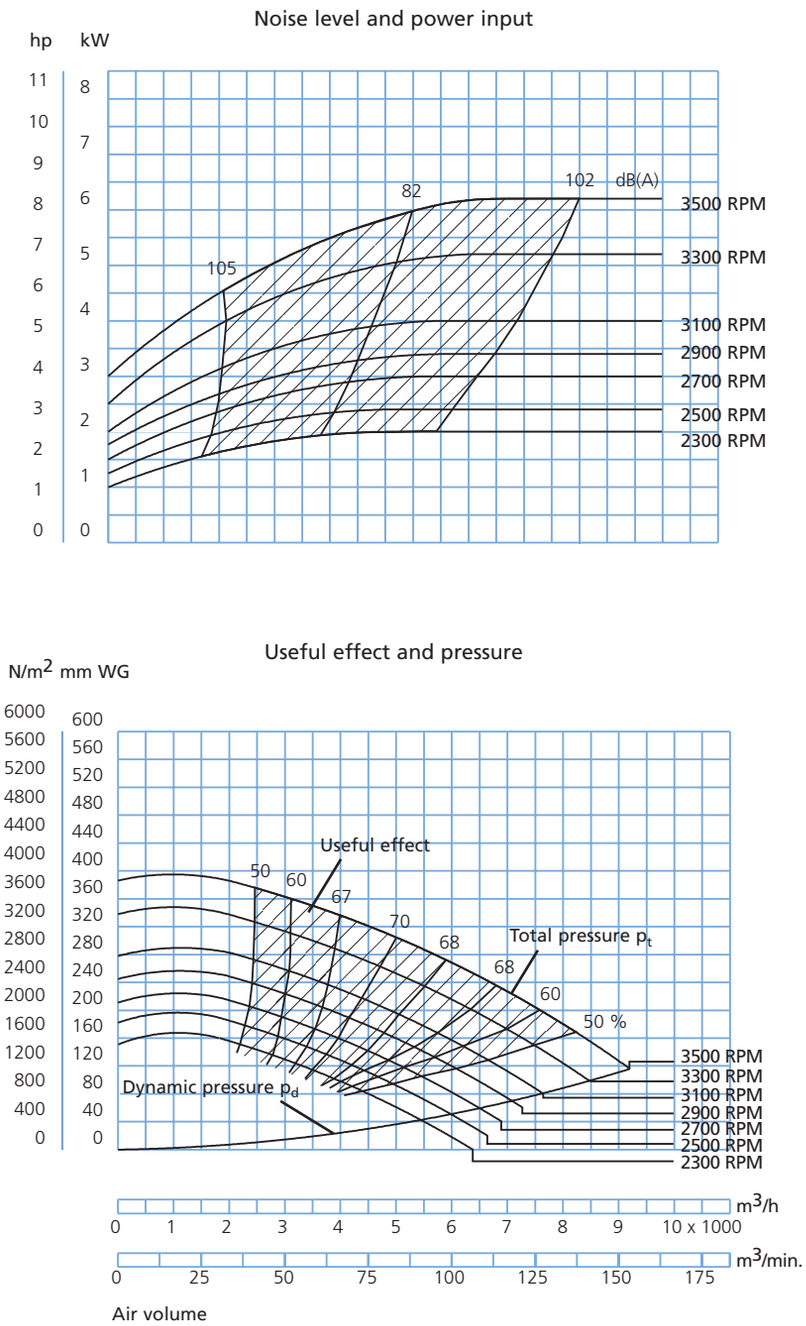

Fan type JK-40MT
Technical data

Motor: IP 55

Supplied with the following motors:

kW	hp	amp.	Weight of motor kg
5,5	7,5	11,1	43
7,5	10,0	14,7	49
11,0	15,0	21,2	69
15,0	20,0	28,2	83
18,5	25,0	34,4	87

Max. RPM:

Standard impeller: 3,435 RPM

Operating range:

Air volume: 4,500 – 17,000 m^3/h

Pressure: 100 – 450 mm WG

Power supply:

400 V - 50 Hz.

Construction:

B3 - motor mounted on foot.

Impeller:

No. of blades, standard: 8 pcs.

Diameter: ø505 mm

Height: 209 mm

Noise level and power input

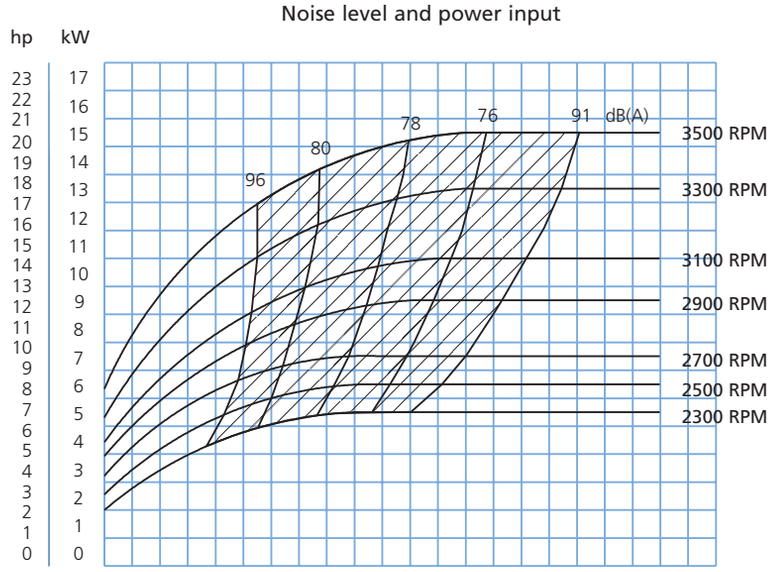

Useful effect and pressure

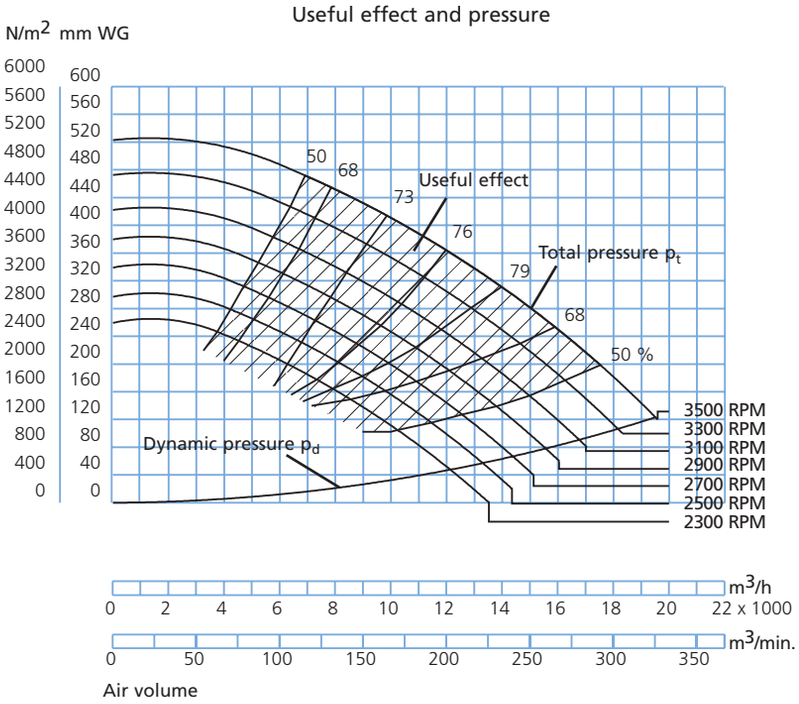

Fan type JK-50MT
Technical data

Motor: IP 55

Supplied with the following motors:

kW	hp	amp.	Weight of motor kg
11,0	15,0	21,2	69
15,0	20,0	28,2	83
18,5	25,0	34,4	87
22,0	30,0	40,0	165
30,0	40,0	52,5	240

Max. RPM:

Standard impeller: 2,450 RPM

Operating range:

Air volume: 6,000 – 28,000 m^3/h

Pressure: 120 – 520 mm WG

Power supply:

400 V - 50 Hz.

Construction:

B3 - motor mounted on foot.

Impeller:

No. of blades, standard: 8 pcs.

Diameter: ø705 mm

Height: 243 mm

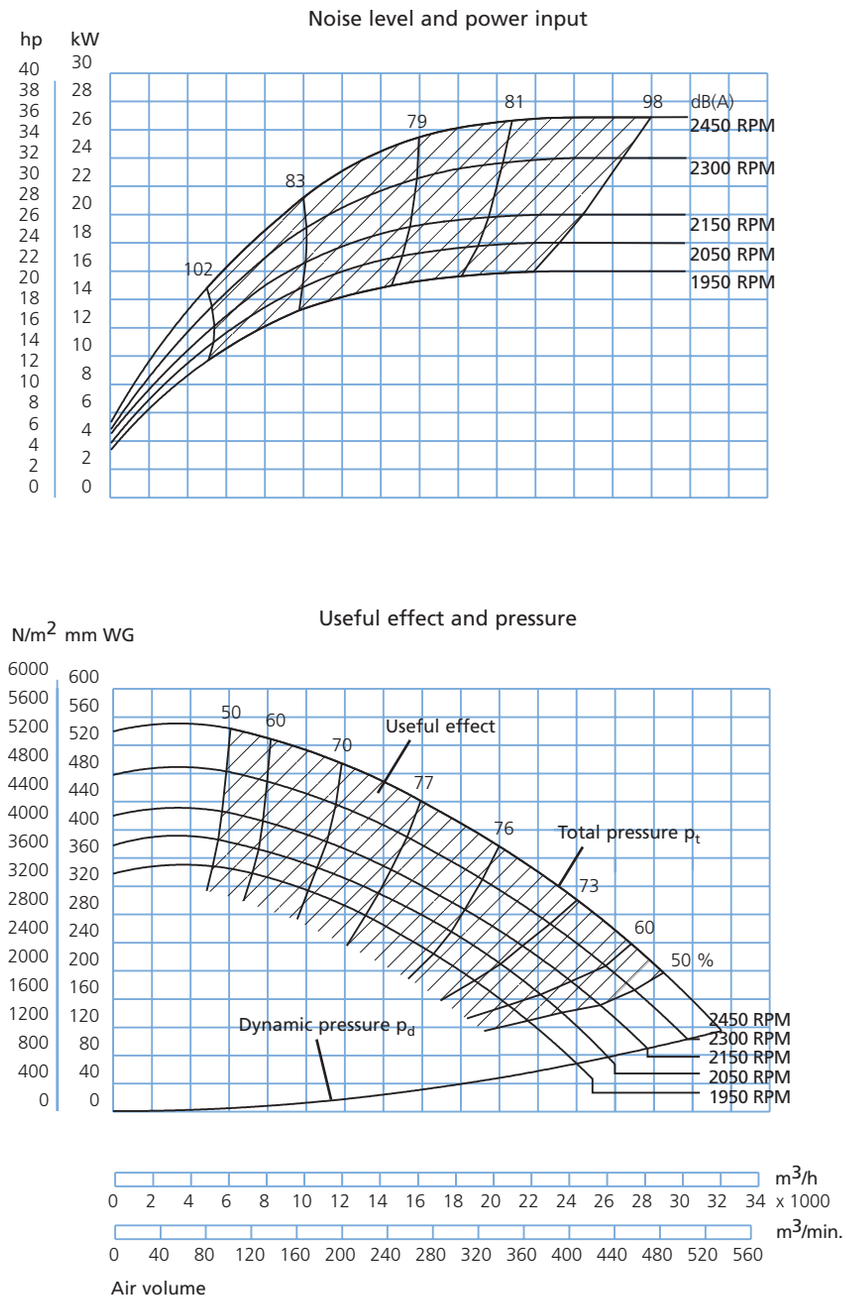

Fan type JK-60MT
Technical data

Motor: IP 55

Supplied with the following motors:

kW	hp	amp.	Weight of motor kg
22,0	30,0	40,0	165
30,0	40,0	52,5	240
37,0	50,0	67,0	300
45,0	62,0	80,0	330

Max. RPM:

Standard impeller: 2,350 RPM

Operating range:

Air volume: 9,000 – 39,000 m^3/h

Pressure: 160 – 600 mm WG

Power supply:

400 V - 50 Hz.

Construction:

B3 - motor mounted on foot.

Impeller:

No. of blades, standard: 8 pcs.

Diameter: ø805 mm

Height: 285 mm

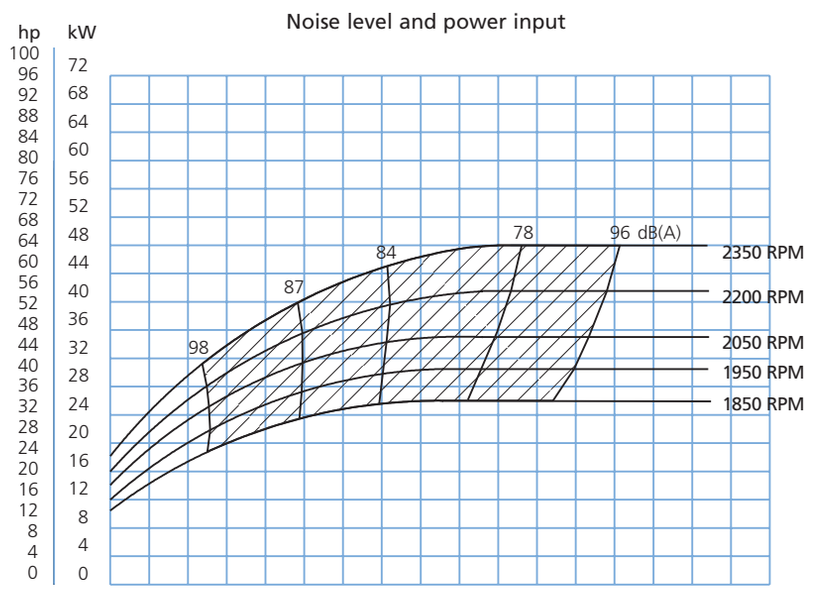

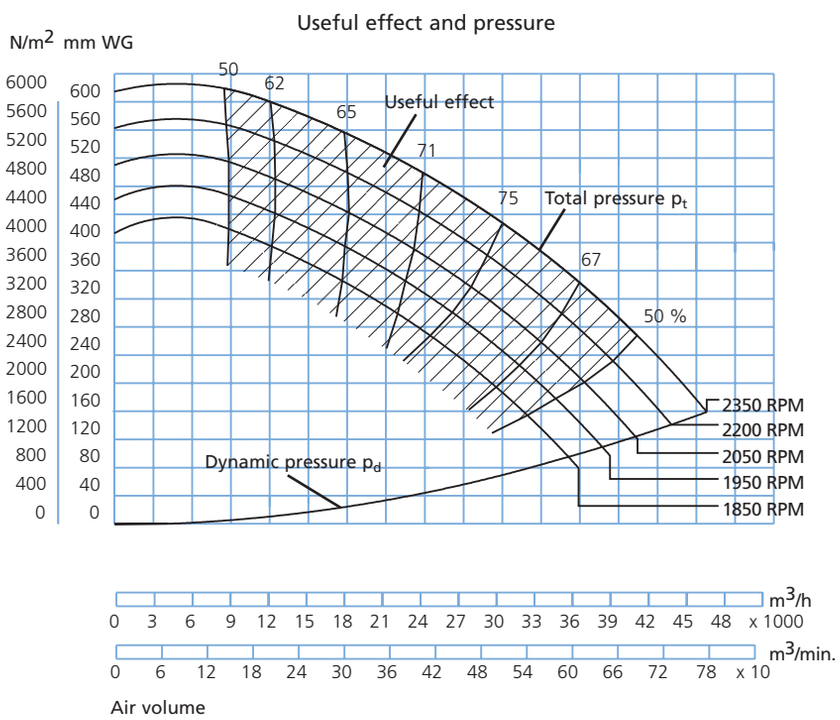

Fan type JK-70MT
Technical data

Motor: IP 55

Supplied with the following motors:

kW	hp	amp.	Weight of motor kg
30,0	41,0	53,0	230
37,0	50,0	67,0	300
45,0	62,0	80,0	330
55,0	75,0	97,0	435
75,5	103,0	133,0	610

Max. RPM:

Standard impeller: 2,050 RPM

Operating range:

Air volume: 12,000 – 54,000 m^3/h

Pressure: 150 – 600 mm WG

Power supply:

400 V - 50 Hz.

Construction:

B3 - motor mounted on foot.

Impeller:

No. of blades, standard: 8 pcs.

Diameter: ø905 mm

Height: 315 mm

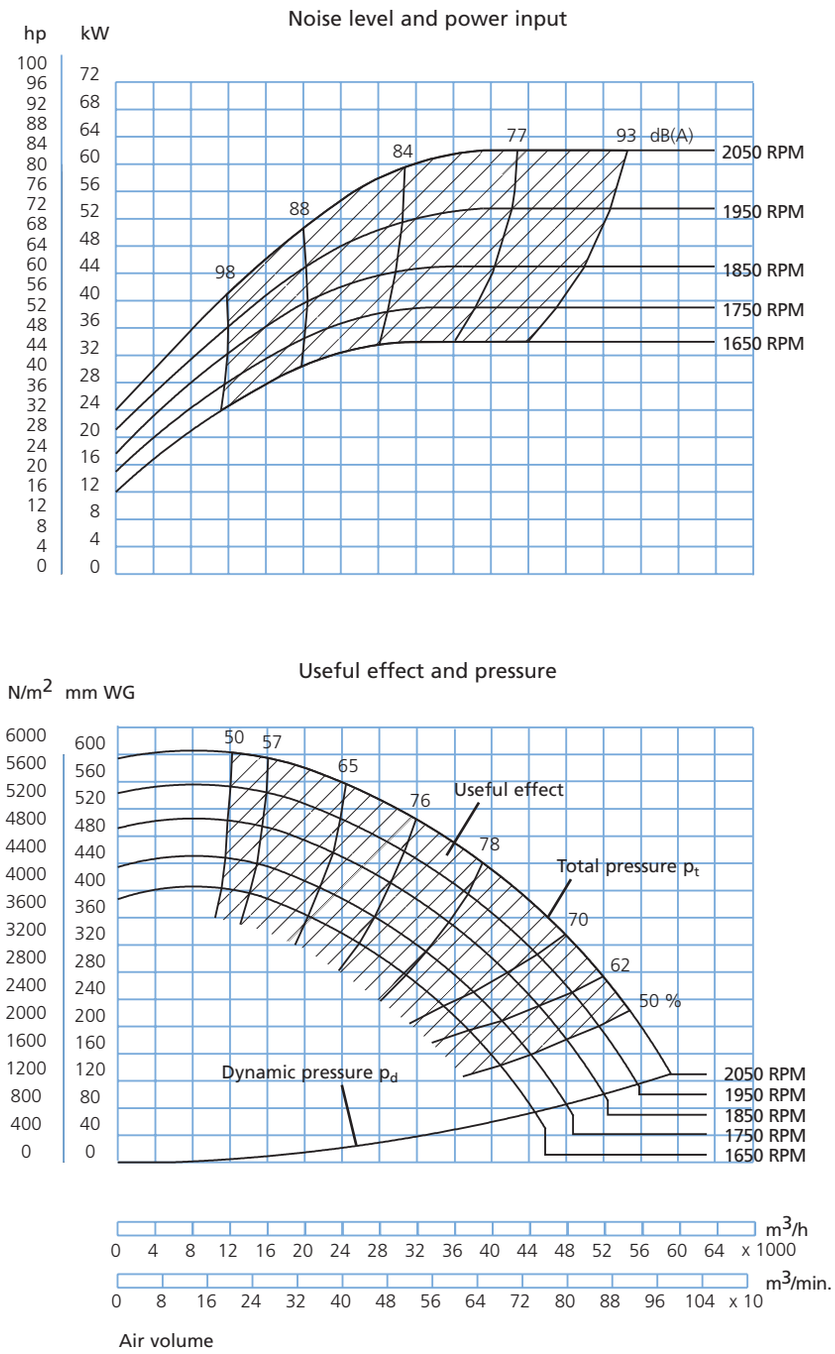

Fan type JK-80MT
Technical data

Motor: IP 55

Supplied with the following motors:

kW	hp	amp.	Weight of motor kg
37,0	50,0	67,0	300
45,0	62,0	80,0	330
55,0	75,0	97,0	435
75,5	103,0	133,0	610
90,0	123,0	159,0	660

Max. RPM:

Standard impeller: 1,850 RPM

Operating range:

Air volume: 16,000 – 64,000 m^3/h

Pressure: 160 – 560 mm WG

Power supply:

400 V - 50 Hz.

Construction:

B3 - motor mounted on foot.

Impeller:

No. of blades, standard: 8 pcs.

Diameter: ø1007 mm

Height: 357 mm

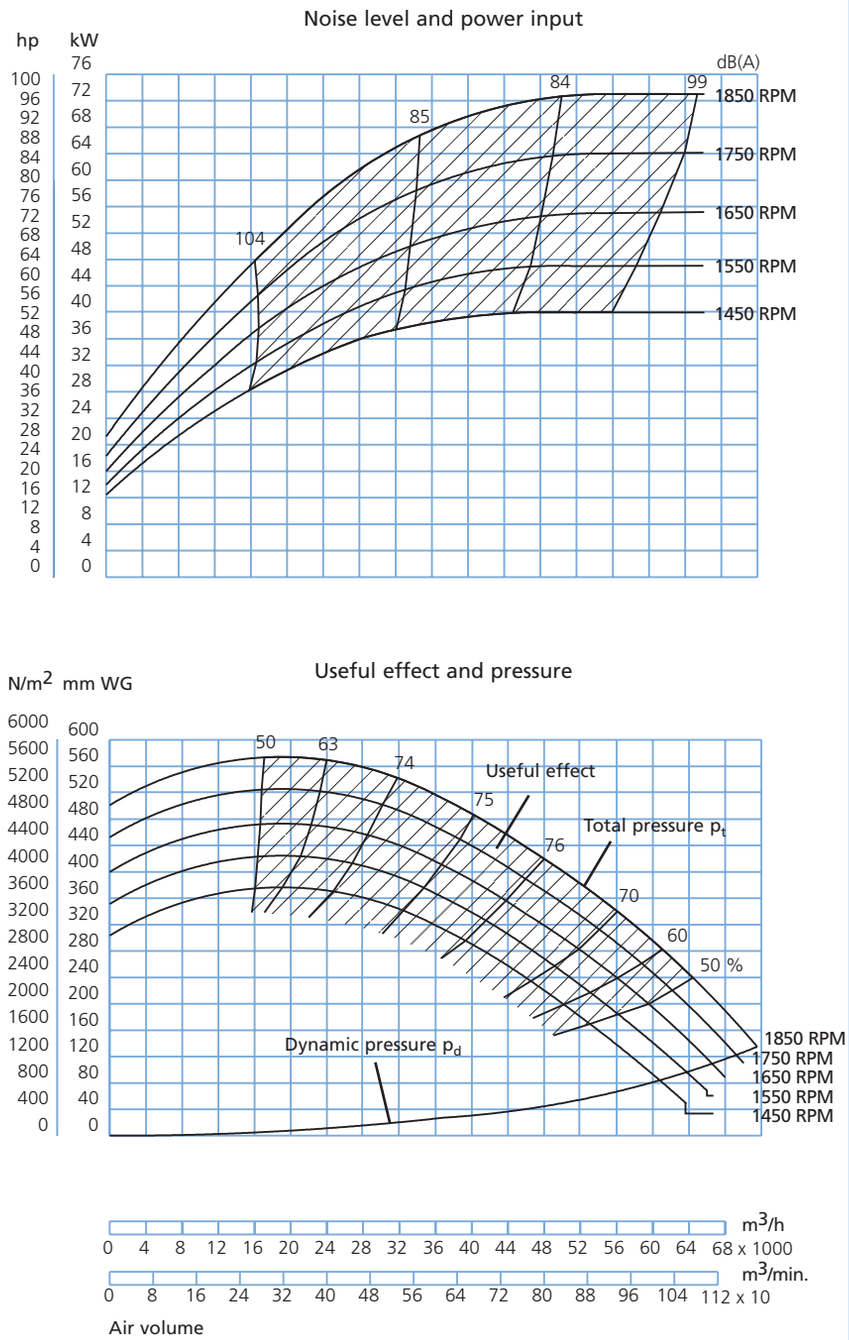

Fan type JK-90MT
Technical data

Motor: IP 55

Supplied with the following motors:

kW	hp	amp.	Weight of motor kg
45,0	62,0	80,0	330
55,0	75,0	97,0	435
75,5	103,0	133,0	610
90,0	123,0	159,0	660
110,0	151,0	195,0	830

Max. RPM:

Standard impeller: 1,650 RPM

Operating range:

Air volume: 25,000 – 80,000 m^3/h

Pressure: 150 – 560 mm WG

Power supply:

400 V - 50 Hz.

Construction:

B3 - motor mounted on foot.

Impeller:

No. of blades, standard: 8 pcs.

Diameter: ø1127 mm

Height: 417 mm

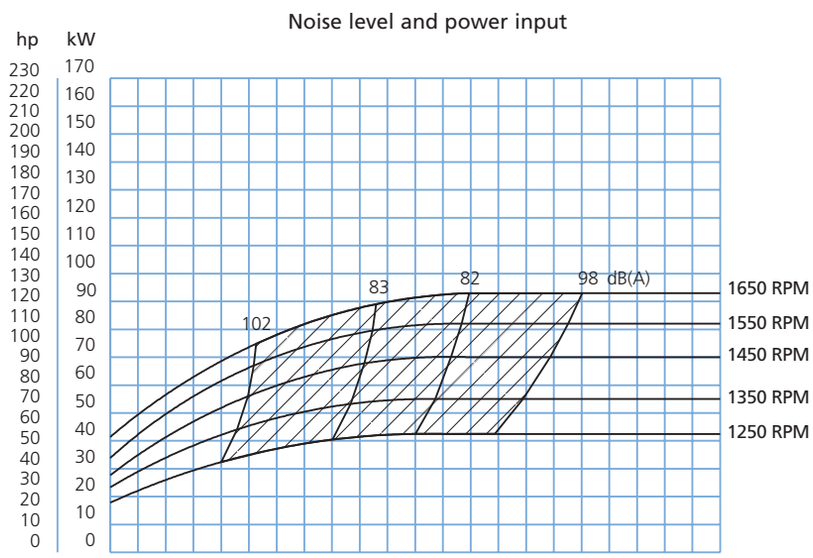

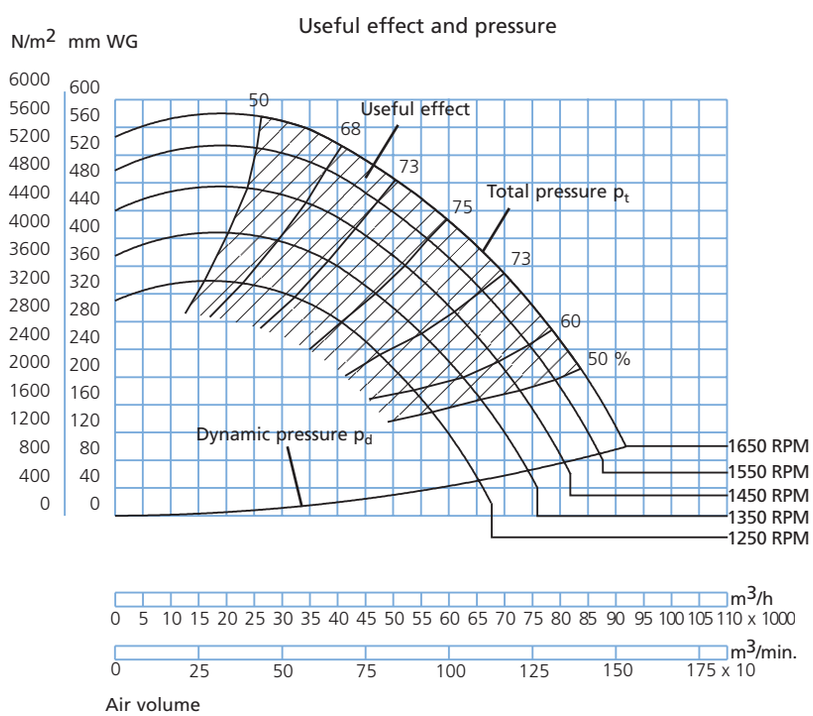

Fan type JK-100MT
Technical data

Motor: IP 55

Supplied with the following motors:

kW	hp	amp.	Weight of motor kg
55,0	75,0	97,0	435
75,5	103,0	133,0	610
90,0	123,0	159,0	660
110,0	151,0	195,0	830
132,0	180,0	232,0	910

Max. RPM:

Standard impeller: 1,550 RPM

Operating range:

Air volume: 25,000 – 115,000 m^3/h

Pressure: 140 – 600 mm WG

Power supply:

400 V - 50 Hz.

Construction:

B3 - motor mounted on foot.

Impeller:

No. of blades, standard: 8 pcs.

Diameter: ø1257 mm

Height: 484 mm

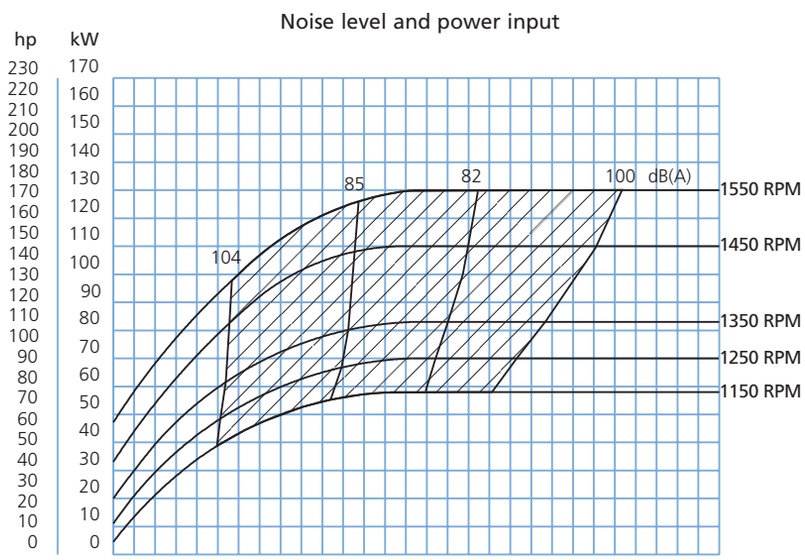

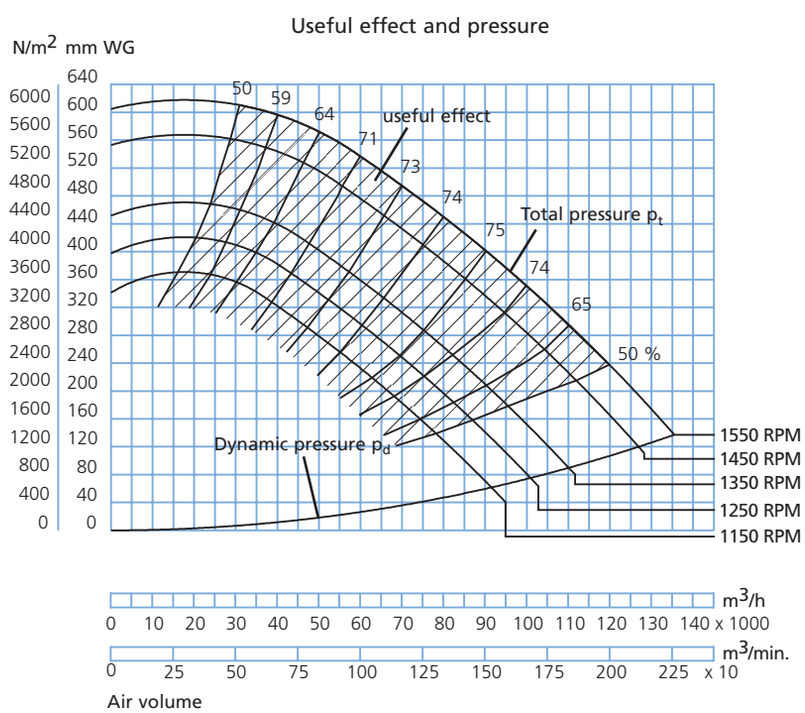

Fan types BL-400 and BL-500

The direct drive fan types BL-400 and BL-500 are designed for transport of clean air.

Equipped with self-cleaning impellers with backward-inclined blades. The aerodynamic intake is manufactured in aluminium and thus ensures anti-spark operation.

The fan housing and impeller are manufactured from 2 mm galvanised plate.

Max. operating temperature: 60°C

Can be supplied with explosion-proof (Eex) motor.

Dimensions (D) for the inlet are external. Supplied smooth.

Specific dimensions for outlet flanges can be found under “Flanges”.

The technical data for each type appears on the following pages.

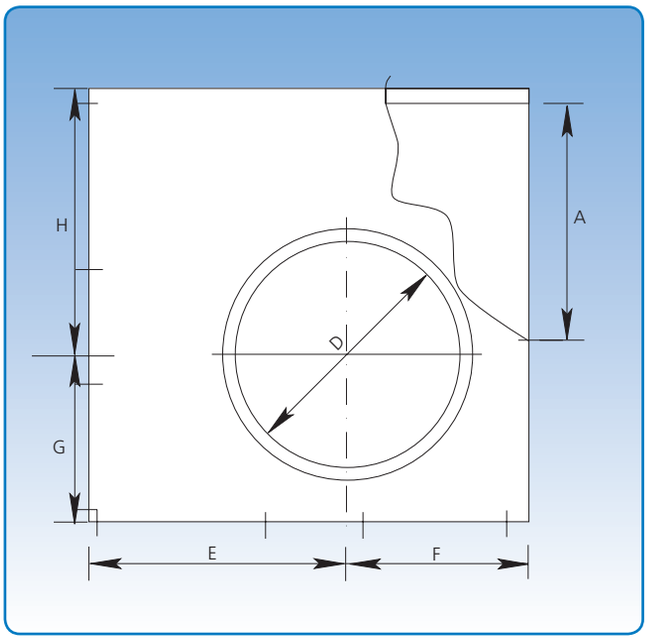

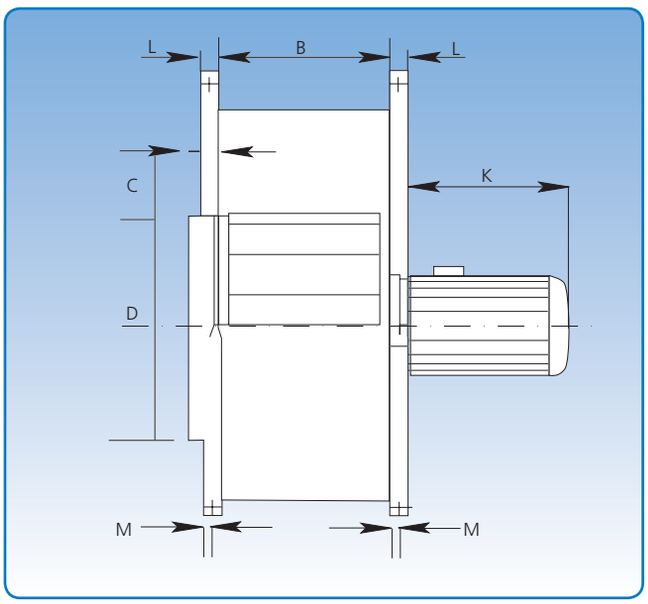

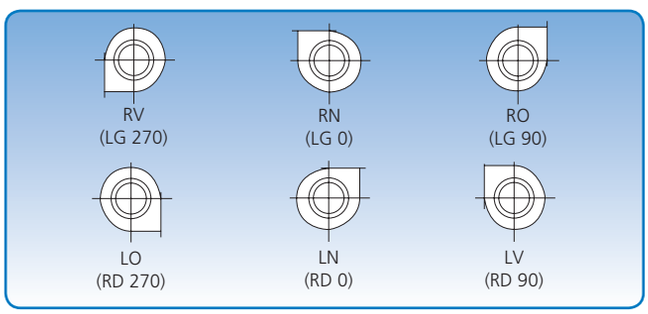

3 positions. The position illustrations are viewed from the inlet side.

Type	Dimensions											Weight without motor kg
	A mm	B mm	C mm	D mm	E mm	F mm	G mm	H mm	K mm	L mm	M mm	
BL-400	400	310	55	400	425	365	340	450	285	27	14	59
BL-500	500	394	55	500	534	474	416	592	354	27	14	86

Fan type BL-400
Technical data

Motor: IP 55

Supplied with the following motors:

kW	hp	amp.	Weight of motor kg
1,5	2,0	6,0	15
2,2	3,0	8,5	22

Max. RPM:

Standard impeller: 1,430 RPM

Operating range:

Air volume: 2,500 – 5,500 m^3/h

Pressure: 45 – 65 mm WG

Power supply:

230 V - 50 Hz.

Construction:

B5 – flange motor.

Impeller:

No. of blades, standard: 12 pcs.

Diameter: ø405 mm

Height: 180 mm

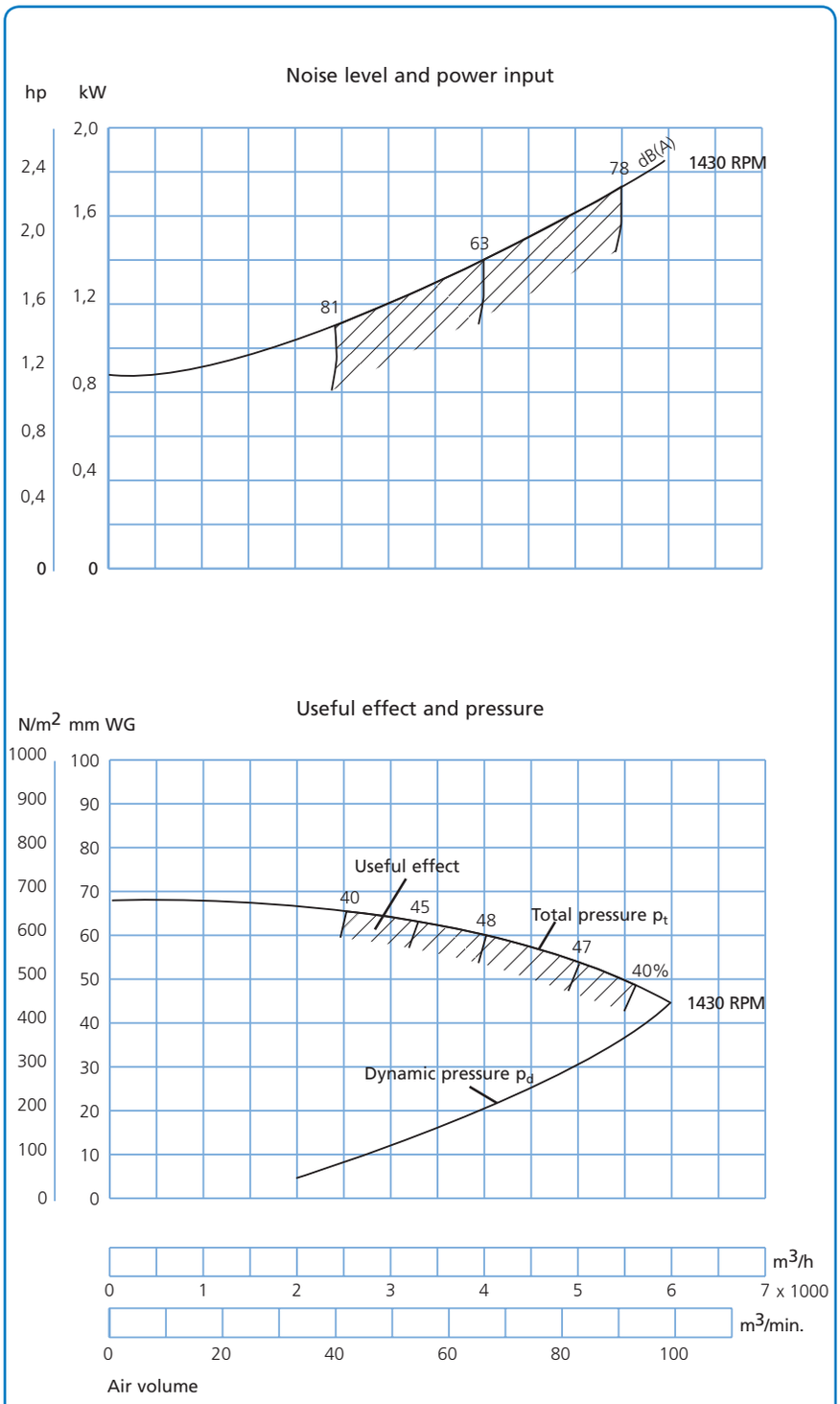

Fan type BL-500
Technical data

Motor: IP 55

Supplied with the following motors:

kW	hp	amp.	Weight of motor kg
3,0	4,0	6,5	25
4,0	5,5	8,3	31

Max. RPM:

Standard impeller: 1,430 RPM

Operating range:

Air volume: 5,000 – 11,000 m^3/h

Pressure: 50 – 70 mm WG

Power supply:

3,0 kW: 230 V - 50 Hz.

4,0 kW: 400 V - 50 Hz.

Construction:

B5 – flange motor.

Impeller:

No. of blades, standard: 12 pcs.

Diameter: ø470 mm

Height: 215 mm

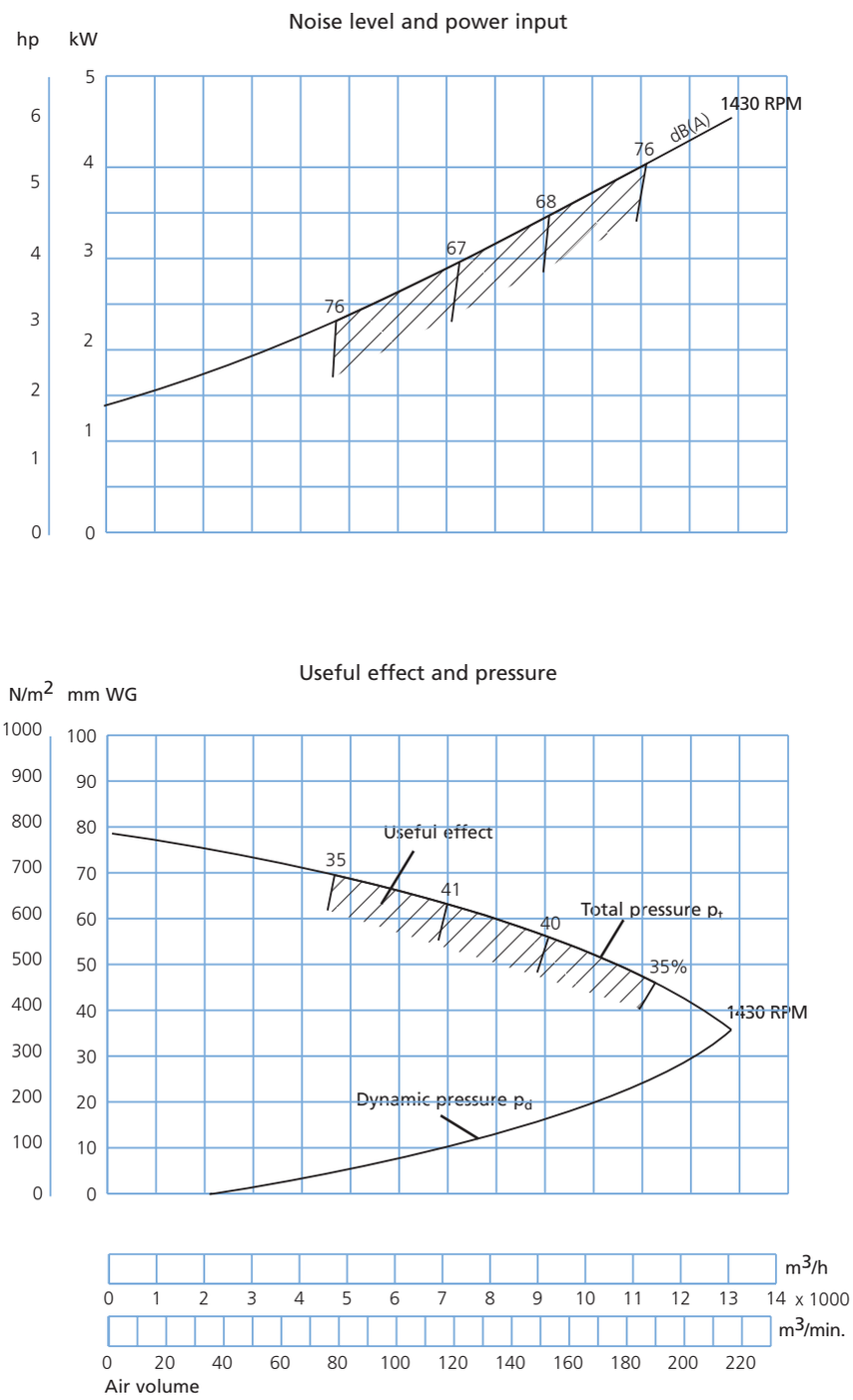

High-pressure fans type JK-HT

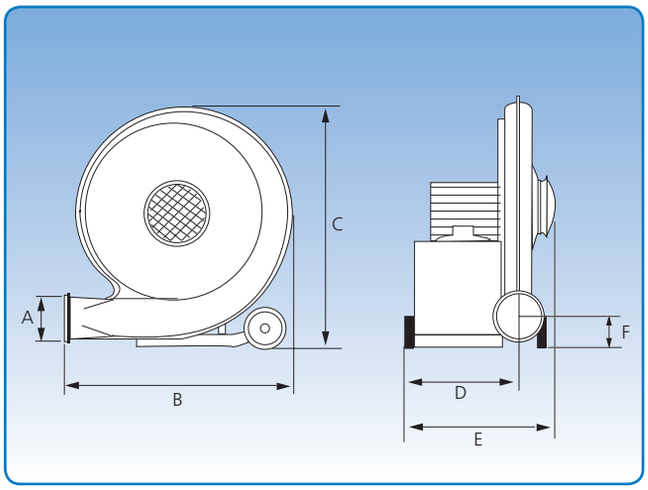

Types JK-2HT - JK-7HT with direct drive. JK-5HT is only available with throttle valve. Dimensional specifications are given in the table below.

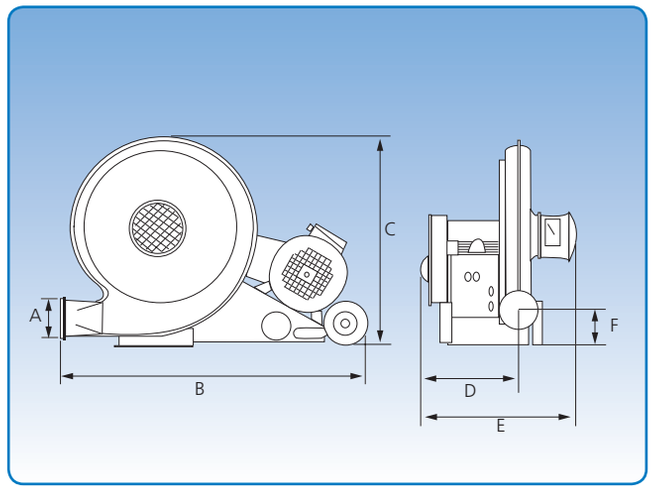

Type JK-10HT and JK-15HT with indirect drive. Dimensional specifications are given in the table below.

The JK-HT high-pressure fans are one-step centrifugal fans with sealed impellers. They are designed for transport of granular material with a density of between 0.2 and 1.2 tons/m^3.

The material is delivered via a duct system using an injector or feeder unit. Material must never be transported through the fan.

The rotor is manufactured with backward-inclined blades. The aerodynamic design ensures high efficiency with low energy consumption.

The JK-2CFA and JK-3CFA feeder units or the injectors 2, 4 and 5 can be mounted on the high-pressure fans.

Ideal for transport, ventilation and extraction.

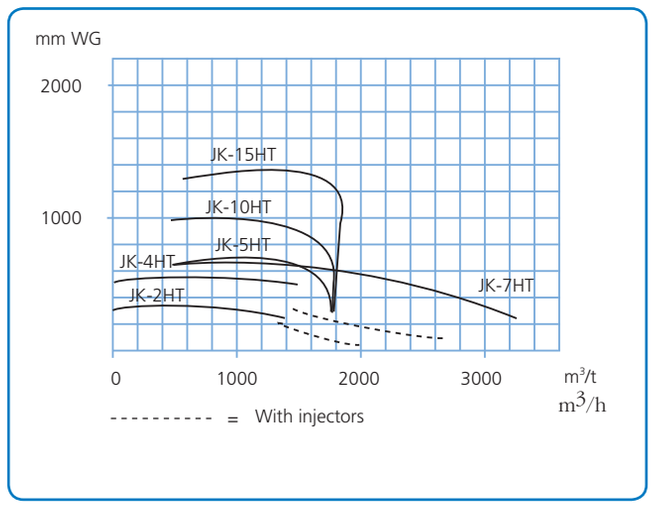

Type	Dimensions A mm	B mm	C mm	D mm	E mm	F mm	Noise level at 7m dB(A)	Min. fuse rating amp.	Power consumption amp.
JK-2HT	JK-6"	635	675	335	485	130	64	10	3,4
JK-4HT	JK-6"	755	840	420	580	120	64	16	6,3
JK-5HT	JK-6"	755	840	420	670	129	77	16	8,5
JK-7HT	JK-6"	755	860	420	580	140	71	20	11,5
JK-10HT	JK-6"	1140	830	435	695	120	73	25	15,5
JK-15HT	JK-6"	1140	830	435	695	120	81	35	21,5

High-pressure fans type JK-HT
Technical data

Type JK-2HT
Motor size: 1.5 kW (2 hp)
RPM: 2,850 RPM
Max. air volume: 1,900 m^3/h
Max. air pressure: 250 mm WG
Rotor speed: 2,850 RPM
Weight: 35 kg

Type JK-4HT
Motor size: 3 kW (4 hp)
RPM: 2,850 RPM
Max. air volume: 2,600 m^3/h
Max. air pressure: 350 mm WG
Rotor speed: 2,850 RPM
Weight: 67 kg

Type JK-5HT
Motor size: 4 kW (5.5 hp)
RPM: 2,850 RPM
Max. air volume: 1,800 m^3/h
Max. air pressure: 650 mm WG
Rotor speed: 2,850 RPM
Weight: 76 kg

Type JK-7HT
Motor size: 5.5 kW (7.5 hp)
RPM: 2,850 RPM
Max. air volume: 3,200 m^3/h
Max. air pressure: 650 mm WG
Rotor speed: 2,850 RPM
Weight: 96 kg

Type JK-10HT
Motor size: 7.5 kW (10 hp)
RPM: 2,850 RPM
Max. air volume: 1,800 m^3/h
Max. air pressure: 950 mm WG
Rotor speed: 3,650 RPM
Weight: 129 kg

Type JK-15HT
Motor size: 11 kW (15 hp)
RPM: 2,850 RPM
Max. air volume: 1,800 m^3/h
Max. air pressure: 1,300 mm WG
Rotor speed: 4,200 RPM
Weight: 157 kg

Common specifications:
Motor: IP 55
Power supply: 3 x 400 V - 50 Hz

High pressure fans	L_{eq} (m)
JK-2HT + injector 2	4.5
JK-4HT + injector 4	5.7
JK-5HT/JK-7HT + injector 5	5.9
JK-5HT/JK-7HT + JK-2CFA	7.4
JK-10HT + JK-2CFA	8.9
JK-15HT + JK-2CFA/JK-3CFA	9.2

Transport capacity:
Air temperature = 20°C
Air pressure = 760 mm Hg

Horizontal and vertical duct lines with min. 2 m of straight ducts only between bends etc.

Transport capacity (tons/h) for barley, rye and maize:

Transport length (m)	10	20	30	40	50	60	80	100	120	150	200
JK-2HT + Injector 2	2.5	2.0	1.7	1.4	1.2	1.0	0.7	0.5			
JK-4HT + Injector 4	4.3	3.6	3.0	2.6	2.3	2.0	1.6	1.2			
JK-5HT-JK-7HT + Injector 5	4.7	3.9	3.3	2.9	2.5	2.2	1.8	1.4	1.1	0.8	
JK-5HT-JK-7HT + JK-2CFA	8.7	7.4	6.4	5.6	4.9	4.4	3.5	2.9	2.4	1.8	
JK-10HT + JK-2CFA	16.4	13.8	11.9	10.3	9.1	8.0	6.4	5.2	4.3	3.2	2.0
JK-15HT + JK-2CFA	16.5	15.9	15.3	14.7	13.2	11.7	9.3	7.6	6.2	4.6	2.9
JK-15HT + JK-3CFA	23.9	20.2	17.3	15.0	13.2	11.7	9.3	7.6	6.2	4.6	2.9

Transport capacity (tons/h) for wheat, rape and peas:

Transport length (m)	10	20	30	40	50	60	80	100	120	150	200
JK-2HT + Injector 2	2,3	1,9	1,6	1,3	1,1	0,9	0,7	0.5			
JK-4HT + Injector 4	4,0	3,3	2,8	2,5	2,1	1,9	1,5	1.1			
JK-5HT-JK-7HT + Injector 5	4,3	3,7	3,1	2,7	2,4	2,1	1,6	1,3	1,1	0.8	
JK-5HT-JK-7HT + JK-2CFA	8,2	6,9	6,0	5,2	4,6	4,1	3,3	2,7	2,2	1.7	
JK-10HT + JK-2CFA	15,3	12,9	11,1	9,7	8,5	7,5	6,0	4,9	4,0	3,0	1.9
JK-15HT + JK-2CFA	18,5	17,9	16,2	14,1	12,3	10,9	8,7	7,1	5,8	4,3	2.7
JK-15HT + JK-3CFA	22,3	18,8	16,2	14,1	12,3	10,9	8,7	7,1	5,8	4,3	2,7

Transport capacity (tons/h) for oats:

Transport length (m)	10	20	30	40	50	60	80	100	120	150	200
JK-2HT + Injector 2	2,5	2,0	1,7	1,4	1,2	1,0	0,7	0.5			
JK-4HT + Injector 4	4,3	3,6	3,0	2,6	2,3	2,0	1,6	1.2			
JK-5HT-JK-7HT + Injector 5	4,7	3,9	3,3	2,9	2,5	2,2	1,8	1,4	1,1	0.8	
JK-5HT-JK-7HT+ JK-2CFA	8,7	7,4	6,4	5,6	4,9	4,4	3,5	2,9	2,4	1.8	
JK-10HT + JK-2CFA	11,9	11,6	11,2	10,3	9,1	8,0	6,4	5,2	4,3	3,2	2.0
JK-15HT + JK-2CFA	11,9	11,6	11,2	10,9	10,5	10,2	9,3	7,6	6,2	4,6	2.9
JK-15HT + JK-3CFA	19,8	19,3	17,3	15,0	13,2	11,7	9,3	7,6	6,2	4,6	2,9

Capacity calculation:

Capacities given in the table apply to horizontal duct line + 4 m vertical ducts + 2 x 90° bends + outlet cyclone.

1. Transport length (m) = (horizontal length) + (vertical length) + (vertical length x 1.2) + ((number of 90° bends - 2) x L_{eq}) + (number of 30° bends x 1/3 L_{eq}) + (number of 45° bends x 1/2 L_{eq}) + (number of 60° bends x 2/3 L_{eq}) – 4.8.

   L_{eq} can be read from the table (bottom left) for actual combination of components.

2. Capacity is read from the above tables using transport length as follows:

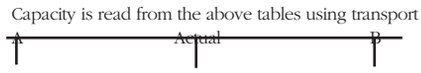

Transport length (m)

Capacity A Capacity Capacity B

$$\text{Capacity [tons/h]} = \text{Capacity (A)} - \left[\text{Capacity (A-B)} \times \frac{\text{Transport length} - \text{Transport length (A)}}{\text{Transport length (B-A)}} \right]$$

3. Capacity corrected for water content + temperature + pressure. Correction factor can be seen in the diagrams below. Corrected capacity = Capacity x water factor x air factor.
   Note that calculated capacity is intended as a guide only, as leaks, grain size etc. can affect capacity.

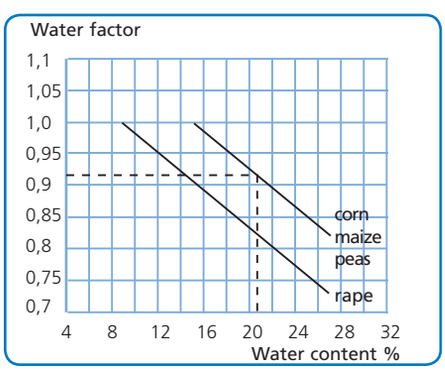

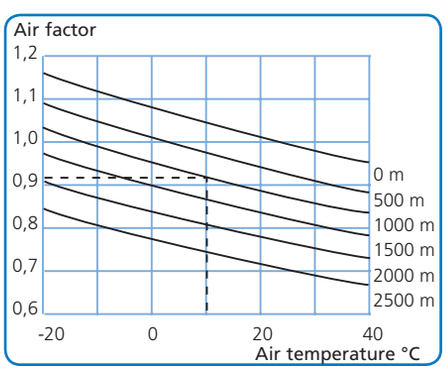

Injectors and feeder units

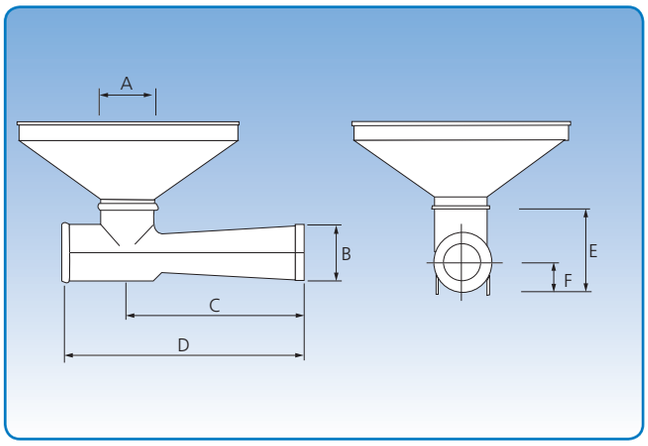

Injector. Dimensional specifications are given in the table below.

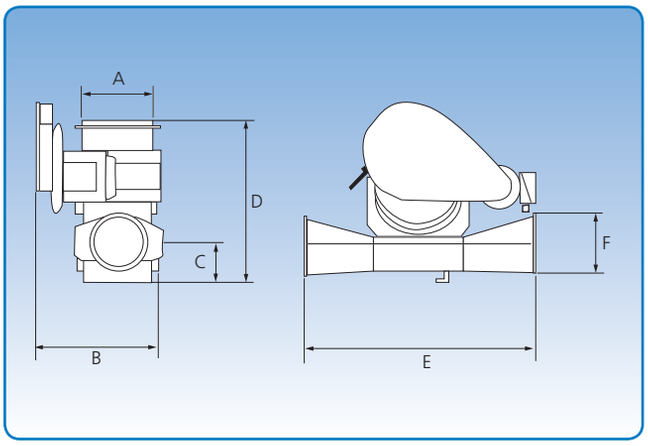

Feeder unit. Dimensional specifications are given in the table below.

The injectors are designed for mounting on high-pressure fan types JK-2HT, JK-4HT, JK-5HT and JK-7HT.

The feeder unit types JK-2CFA and JK-3CFA are designed for pneumatic transport in horizontal ducting.

They can be mounted in horizontal duct lines and withstand dust and pebbles taken in with the grain.

The rotor blades in the feeder units are rubber instead of steel, which flex when struck by hard objects in the air flow, avoiding being damaged.

Designed for use with JK-5HT, JK-7HT, JK-10HT and JK-15HT high-pressure fans where JK-15HT can be mounted with either JK-2CFA or JK-3CFA.

Type feeder units	A	B	C	D	E	F
JK-2CFA	JK-8″	370	110 - 130	445 - 465	660	JK-6″
JK-3CFA	JK-8″	460	120	495	850	JK-6″

Type injectors	A	B	C	D	E min.	F max.
Type 2	JK-6″	JK-6″	500	670	220 - 275	100 - 155
Type 4	JK-6″	JK-6″	500	670	220 - 275	100 - 155
Type 5	JK-6″	JK-6″	500	670	220 - 275	100 - 155

Square flanges type A and round flanges

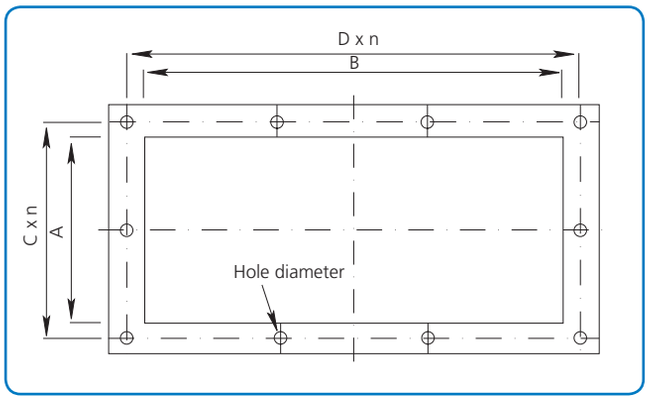

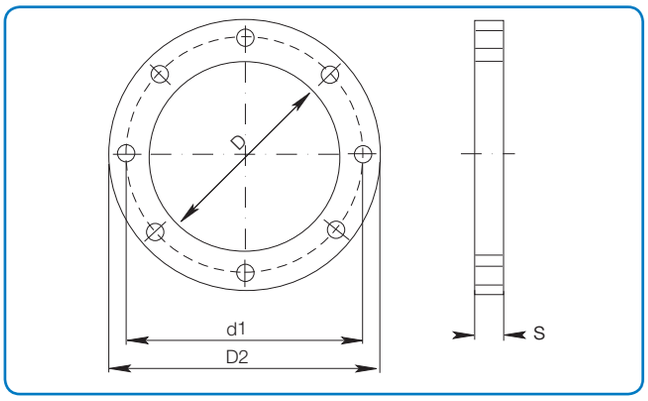

Square flange type A and round flanges.
Dimensional specifications are given in the table below.

Square flanges	Dimensions						
Fan type	A mm	B mm	C x n mm	D x n mm	Hole diameter mm	Material mm	Weight kg
JK-20D	140	140	85 x 2	85 x 2	11	30 x 6	1,04
T-200K/JK-22D	166	166	98 x 2	98 x 2	11	30 x 6	1,20
JK-25D	186	186	108 x 2	108 x 2	11	30 x 6	1,32
JK-30D/JK-30K	206	206	118 x 2	118 x 2	11	30 x 6	1,44
JK-35D/JK-40D/JK-40K	226	326	85 x 3	119 x 3	11	30 x 6	1,69
T-300K/JK-30MTD/JK-30MT	250	250	94 x 3	94 x 3	11	30 x 6	1,71
JK-45K	339	339	123 x 3	123 x 3	11	30 x 6	1,22
JK-40MTD/JK-40MT	350	350	95 x 4	95 x 4	11	30 x 6	2,14
JK-55K	418	418	112 x 4	112 x 4	11	30 x 6	2,74
JK-50MT	455	455	124 x 4	124 x 4	12	40 x 6	3,70
JK-60MT	505	505	109 x 5	109 x 5	12	40 x 6	4,00
JK-75K	555	704	119 x 5	124 x 6	12	40 x 6	5,14
JK-70MT	605	605	129 x 5	129 x 5	12	40 x 6	4,80
JK-80MT	705	705	149 x 5	149 x 5	12	40 x 6	5,58
JK-90MT	805	805	141 x 6	141 x 6	12	40 x 6	6,33
JK-100MT	905	905	135 x 7	135 x 7	12	40 x 6	7,10

Round flanges	Dimensions								
Fan type	Diameter nominal	D mm	d1 mm	D2 mm	s mm	Flange width mm	Hole size mm	No. of holes	Weight kg
JK-30MT	300	305	336	355	5,00	25	9	12	1,00
JK-40MT	400	405	439	465	6,00	30	11	16	2,08
JK-50MT/JK-50LA	500	505	540	565	6,00	30	11	16	2,56
JK-60MT/JK-60LA	600	605	640	665	6,00	30	11	16	3,08
JK-70MT/JK-70LA	700	705	750	785	6,00	40	11	24	3,53
JK-80MT/JK-80LA	800	805	850	885	6,00	40	11	24	5,40
JK-90MT/JK-90LA	900	905	950	985	6,00	40	11	24	6,05
JK-100MT/JK-100LA	1000	1005	1050	1085	6,00	40	11	24	6,69

Twist throttles

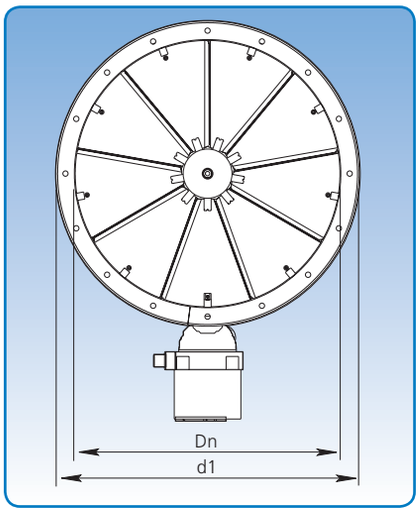

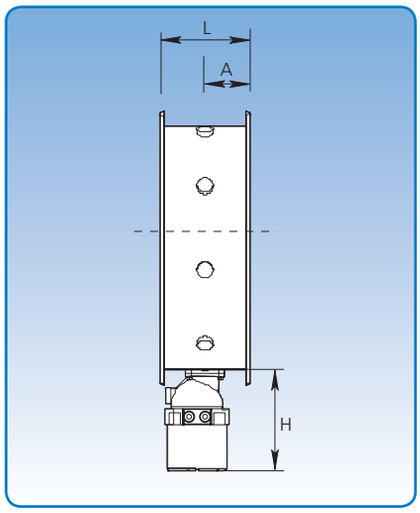

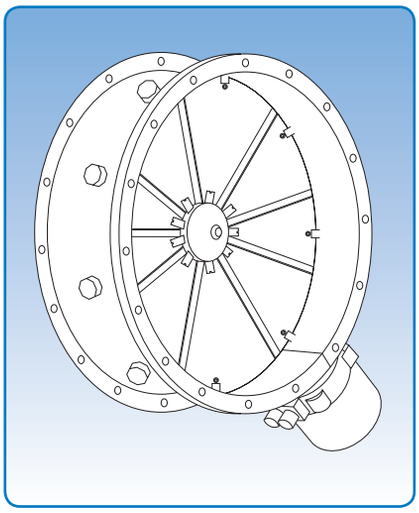

Dimensional specifications are given in the table below.

A centrally driven twist throttle, type JK-LA, is used to regulate air volume to the fan in the most energy-efficient way.

The twist throttle is mounted directionally with flow in the direction of the arrow. Regulation is achieved by all the twist blades turning synchronously between 0° - 90° to create pre-rotation of the air flow entering the fan. The load on the fan impeller is reduced and consequently power consumption. The JK-LA twist throttle can reduce total energy consumption by up to 40%. The turning mechanism in the hub is designed as a sealed, compact and robust unit with a minimum number of components and extremely low friction. The twist throttle requires no servicing and can be used as a throttle valve.

Types JK-50LA, JK-60LA, JK-70LA and JK-80LA uses:

Make: Bernard Z3
0.02 kW: 1 x 230 V - 50 Hz

Types JK-90LA and JK-100LA uses:

Make: Bernard OA6
0.06 kW: 1 x 230 V - 50 Hz
0.10 kW: 3 x 400 V - 50 Hz

Max. operating temperature: 60°C

Actuator:
Frame leakage class, all models: IP 67.

Resistance coefficient for fully open twist throttle: 0.25 – 0.5.

The torque stated is based on differential pressure of p = 500 mm WG.

Specific dimensions for flanges can be found under “Flanges”.

Power supply:

Single phased — 3 phased

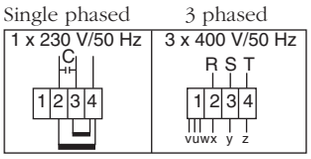

Type	Dimensions Ø. Dn mm	L mm	A mm	d1 mm	H mm	No. of twist blades	Required torque	Weight kg
JK-50LA	500	220	110	585	240	9	24	26,7
JK-60LA	600	220	110	685	240	9	31	31,3
JK-70LA	700	220	110	795	240	9	41	37,1
JK-80LA	800	245	123	890	240	12	56	43,3
JK-90LA	900	245	123	990	200	12	79	52,6
JK-100LA	1000	245	123	1090	200	12	114	59,2

Acoustic booths type BH

The type BH acoustic booths are used for noise reduction.

They are manufactured from 1.25 mm galvanised steel plate and lined with sound-absorbent and fire-resistant material.

A built-in rail system makes installation simple.

Authorised measurement of noise levels has been performed on the acoustic booths, which indicated noise reduction of 20 - 25 dB(A) for fans and high-pressure fans.

Supplied as standard with cooling fan.

Types 50-BH, 75-BH, 80-BH, 90-BH and 100-BH are supplied with doors.

Cooling fan and doors are standard-mounted as shown on the illustration. Other mounting positions can be supplied upon request.

Doors for other models can be supplied to suit.

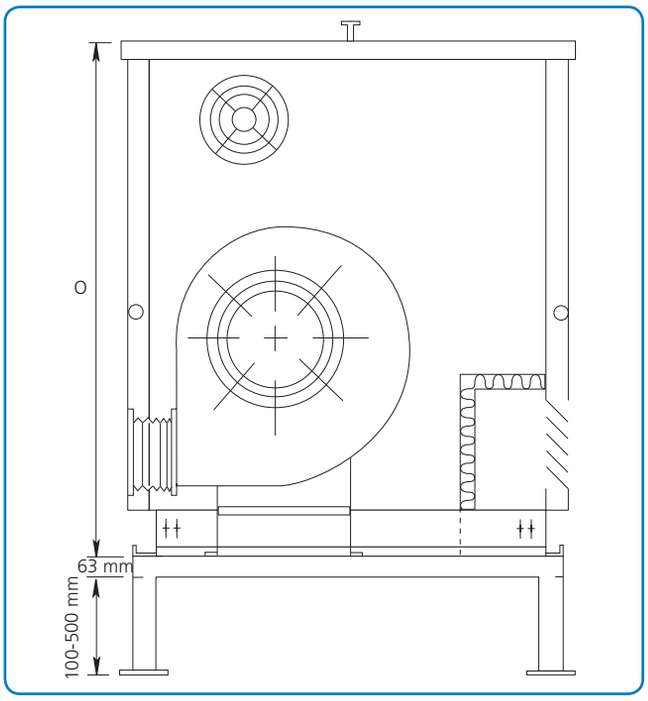

For dimensional specifications, see next page.

Cooling fan type 4656 2W:
Power supply 230 V, 50/60 Hz.
For use with max. 5.5 kW electric motors.
For use with type 30-BH acoustic booths.

Cooling fan type W 2 E 200 HH 38-05:
Power supply 230 V, 50/60 Hz or 230/400 V, 50/60 Hz.
For use with 7.5 - 22 kW electric motors.
For use with type 40-BH and 45-BH acoustic booths.

Cooling fan type W 2 E 250 HL 06-01:

Power supply 230 V, 50/60 Hz or 230/400 V, 50/60 Hz.
For use with 30 - 90 kW electric motors.
For use with type 50-BH - 100-BH acoustic booths.

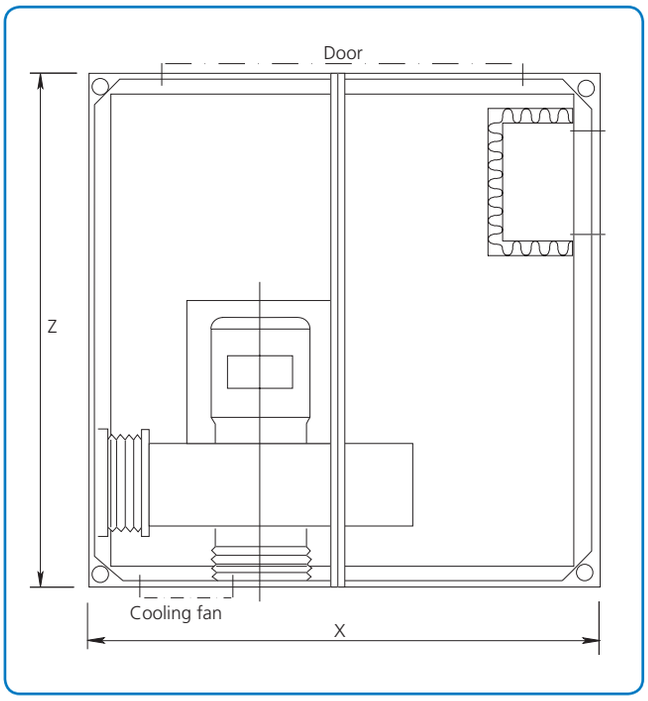

For dimensional specifications, see next page.

Acoustic booths type BH
Technical data

The diagram shows the noise-suppression values for fans and high-pressure fans under the operating conditions stated on the brochure pages.

The measurement report is available upon request.

For 50-BH, 75-BH, 80-BH, 90-BH and 100-BH, the Z measurement is extended by 300 mm if a twist throttle is required.

The top can be reinforced for 75-BH - 100-BH to accommodate mounting of duct silencers.

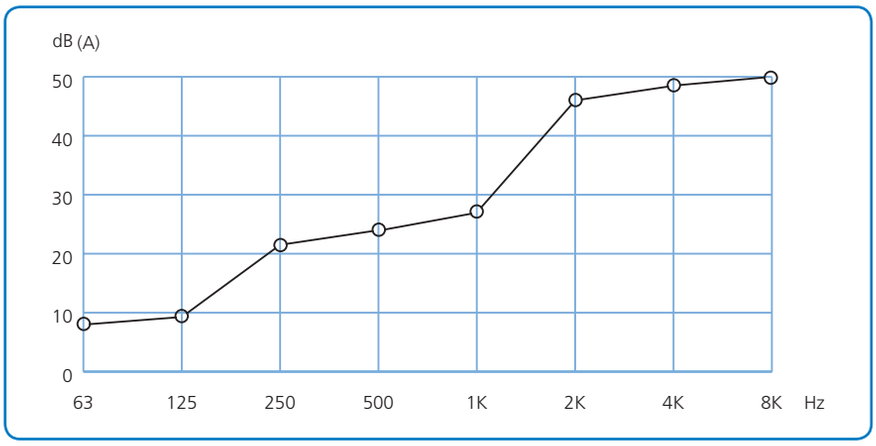

The diagram shows the noise-suppression values in dB(A) at various frequency ranges for fans and high-pressure fans.

Type	Dimensions Length Z mm	Width X mm	Height O mm	Fan type RV, RN, LO, LN	Fan type RO, LV	Weight kg
30-BH	850	850	995	JK-2HT		58
				JK-20D	JK-20D	
				JK-22D	JK-22D	
				JK-25D	JK-25D	
				JK-30D	JK-30D	
40-BH	1150	1150	1295	JK-4HT		105
				JK-5HT		
				JK-7HT		
				JK-35D	JK-35D	
				JK-40D	JK-40D	
				JK-30K	JK-30K	
				JK-30MTD	JK-30MTD	
				JK-30MT	JK-30MTD	
45-BH	1400	1150	1445	JK-10HT		120
				JK-15HT		
				JK-40K	JK-40K	
				JK-45K	JK-45K	
				T-200K	T-200K	
				JK-40MTD	JK-40MTD	
				JK-40MT	JK-40MT	
50-BH	1700	1450	1745	T-300K	T-300K	210
				JK-50MT	JK-50MT	
75-BH	2020	1570	2040	JK-55K	JK-55K	225
				JK-75K	JK-75K	
				JK-60MT	JK-60MT	
80-BH	2320	1870	2080	JK-70MT		390
				JK-80MT		
90-BH	2620	2170	2225		JK-70MT	457
					JK-80MT	
				JK-90MT		
100-BH	2924	2472	2665		JK-90MT	547
				JK-100MT		
	2924	2472	2815		JK-100MT	578

Duct silencers

Diameter: 100 mm - 1250 mm.

The duct silencers are used for noise-suppression in ducting systems.

They are made of 1.00 mm galvanised steel sheet, lined with sound-absorbent material.

Can be supplied for fitting to rapid lock pull rings [f.lyn], pull rings [f.b], wide pull rings [f.bb] or loose flanges [f.b.m.fl].

Duct silencers with an internal diameter of > 250 mm can be supplied with baffles.

They can be fitted internally with perforated plates for ducting carrying light materials, or insulation material as options.

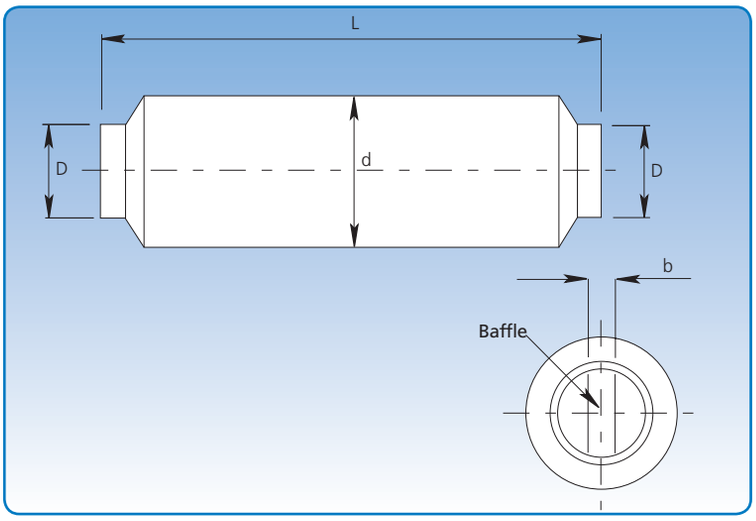

The diagrams show the noise-suppression values for fans and high-pressure fans under the operating conditions stated on the brochure pages. Authorised measurement of noise levels has been performed on the duct silencers.

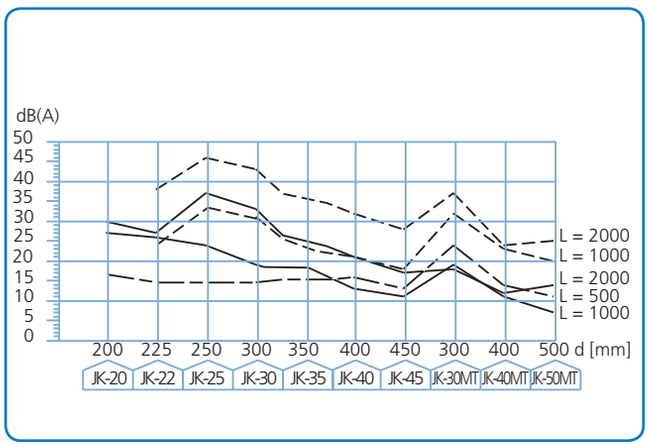

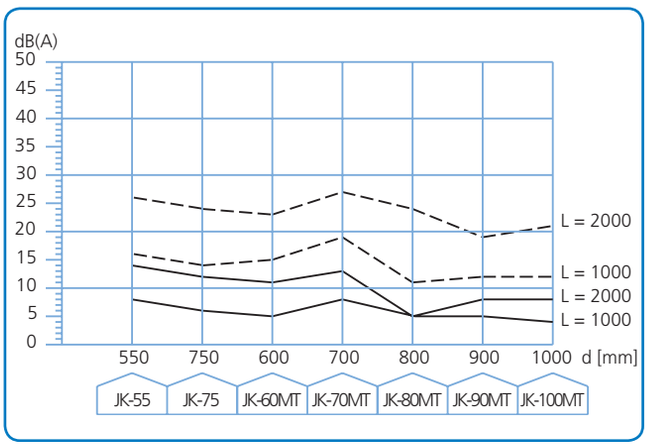

= with baffle ———————— *= without baffle*

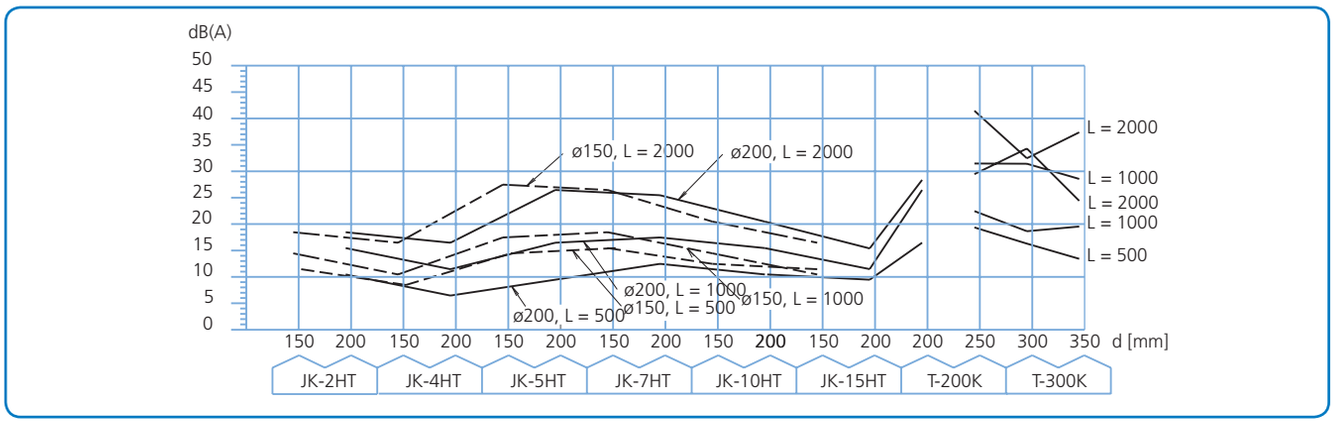

The diagrams show the noise-suppression values in dB(A) for fans.

Duct silencers
Technical data

Noise-suppression values in dB(A) for various frequency bands.

Dimensions				Frequency bands							
D mm	d mm	L mm	b mm	Hz 63	Hz 125	Hz 250	Hz 500	Hz 1000	Hz 2000	Hz 4000	Weight kg
100	300	500		3	12	25	42	35	31	21	6
120	320	500		3	10	19	33	27	24	16	6
125	325	500		3	9	19	32	26	23	15	6,5
140	340	500		2	9	18	30	26	23	15	7
150	350	500		2	9	17	28	24	22	15	7
160	360	500		2	8	16	26	22	20	13	8
180	380	500		1	8	14	24	20	18	13	8,5
200	400	500		1	7	13	22	18	16	11	9
200	400	1000		3	13	25	42	35	31	21	17
225	425	500		1	6	11	20	16	15	10	10
225	425	1000		2	11	22	38	31	28	19	18
250	450	1000		2	10	20	34	28	25	17	20
250	450	1000	100	7	16	27	47	50	43	38	25
275	475	1000		2	10	19	32	26	22	16	21
275	475	1000	100	6	15	26	44	48	38	44	26
300	500	1000		2	9	17	29	23	18	14	22
300	500	1000	100	6	13	25	41	46	33	50	28
315	515	1000		2	8	16	27	21	17	11	24
315	515	1000	100	5	12	22	39	44	31	27	30
350	550	1000		2	7	14	24	18	15	9	26
350	550	1000	100	4	10	20	36	39	28	23	32
400	600	1000		2	6	12	21	14	13	8	29
400	600	1000	100	4	9	18	31	35	25	20	36
450	650	1000		3	6	11	19	11	11	6	32
450	650	2000		5	11	19	38	20	17	10	60
450	650	1000	100	4	8	15	29	31	21	17	40
450	650	2000	100	7	14	28	50	50	37	32	73
500	700	1000		4	6	11	19	8	8	4	37
500	700	2000		6	11	18	35	16	14	8	66
500	700	1000	100	5	7	14	25	28	20	15	45
500	700	2000	100	8	13	25	47	50	37	30	80
550	750	1000		3	5	10	17	8	7	4	38
550	750	2000		5	10	17	32	15	13	7	71
550	750	1000	100	4	6	13	22	26	18	14	47
550	750	2000	100	7	12	23	42	50	35	27	86
600	800	1000		3	5	9	15	7	6	3	42
600	800	2000		5	9	16	28	14	12	6	77
600	800	1000	100	4	6	11	20	24	16	11	52
600	800	2000	100	7	11	20	38	46	32	21	93
630	830	1000	100	4	6	11	18	22	15	10	54
630	830	2000	100	7	11	20	34	42	30	20	97
650	850	1000	100	3	6	10	17	21	14	9	55
650	850	2000	100	5	11	19	31	41	27	17	100
700	900	1000	200	5	7	14	24	21	24	14	69
700	900	2000	200	8	14	26	45	42	46	27	123
750	950	1000	200	5	6	11	20	18	17	11	74
750	950	2000	200	8	12	21	38	36	33	20	131
800	1000	1000	200	4	6	11	19	17	16	10	79
800	1000	2000	200	7	12	21	36	34	30	19	139
850	1050	1000	200	3	5	10	17	16	15	9	84
850	1050	2000	200	5	11	19	32	32	29	18	147
900	1100	1000	200	3	5	10	15	15	14	9	89
900	1100	2000	200	5	11	18	30	30	27	17	155
950	1150	1000	200	3	5	9	14	14	13	8	94
950	1150	2000	200	5	10	17	27	27	25	16	164
1000	1200	1000	200	3	5	9	14	13	13	8	99
1000	1200	2000	200	5	10	17	26	25	24	15	172
1250	1450	1000	200	2	4	7	11	11	10	5	126
1250	1450	2000	200	4	7	13	20	21	19	11	214

Flexible connections

Circular and square flexible connections are available, with or without steel insert.

They are designed to fit the inlets and outlets of the fan range. Other dimensions can be produced to order.

A steel insert is usually included for transport fans and without for clean air fans.

They can also be fitted in standard duct systems.

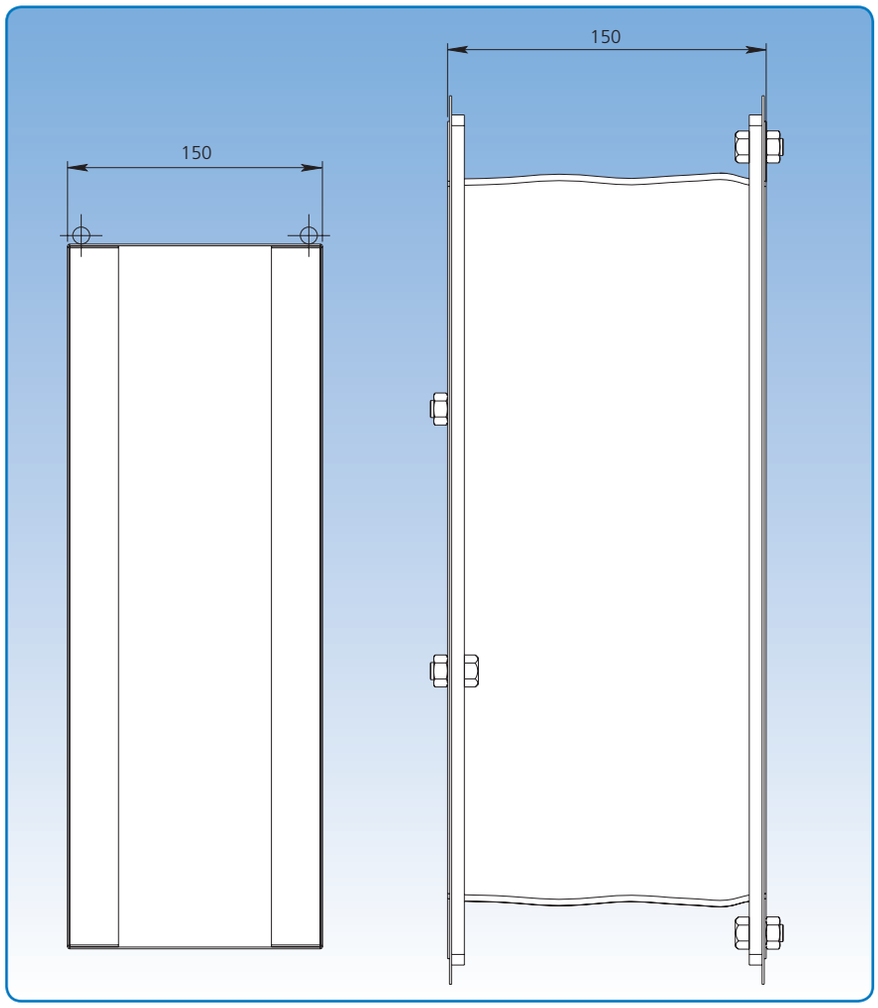

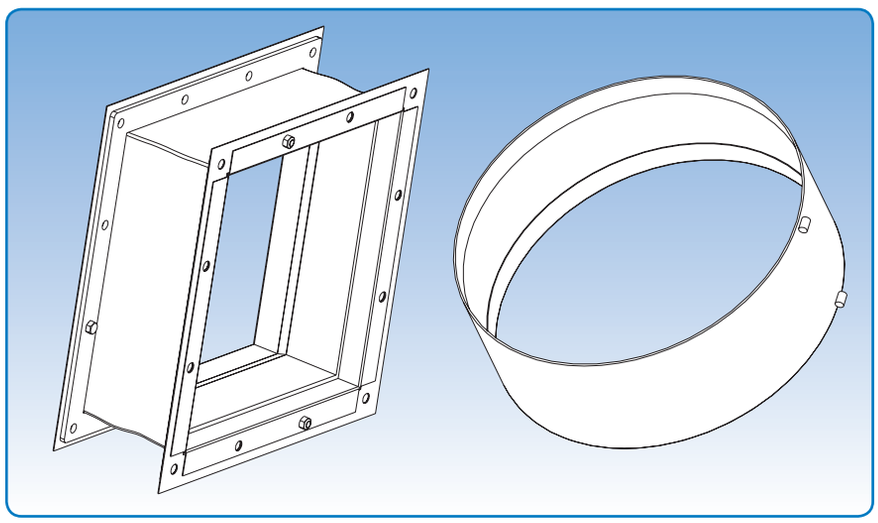

Square with steel insert.

Circular without steel insert.

Vibration dampers, cooling wings, gaskets, pullers

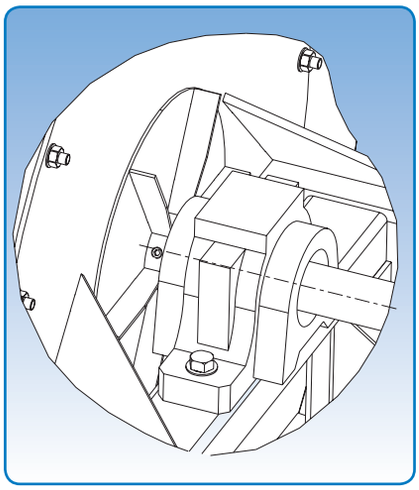

Cooling wings

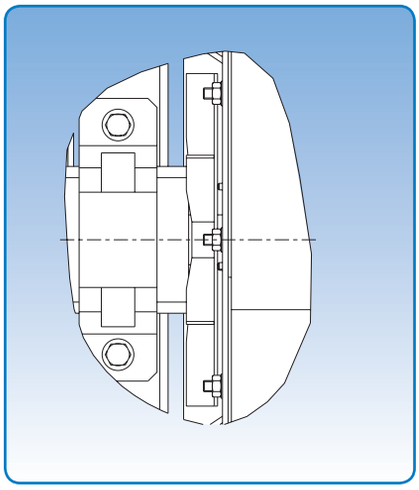

Cooling wings

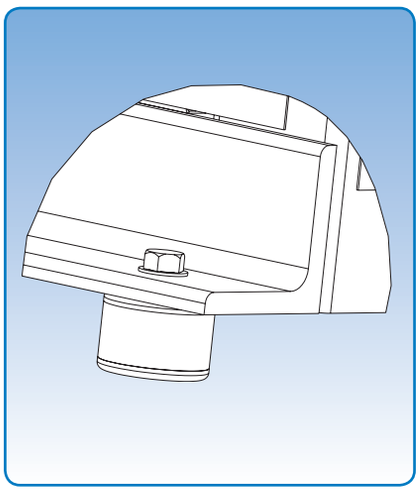

Vibration dampers

Cooling wings are mounted between the fan housing backplate and the bearing nearest the fan housing.

They are used when the fan is working with hot air and necessary for temperatures over 150°C. For temperatures over this mark the bearing housing is filled with temperature-resistant, high quality grease.

The cooling wings are secured to the fan drive shaft, and they are designed to protect the bearings.

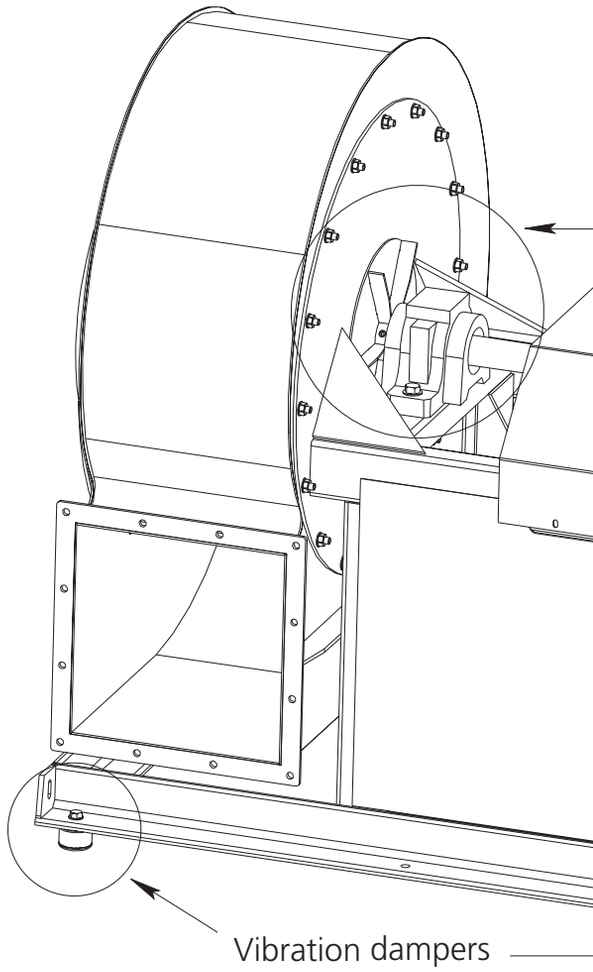

Vibration dampers are always used in combination with flexible connections on the inlet and outlet of the fan – never alone.

The dimensions of vibration dampers are governed by the total weight of the fan. There are threads on both sides for fitting.

Vibration dampers, cooling wings, gaskets, pullers

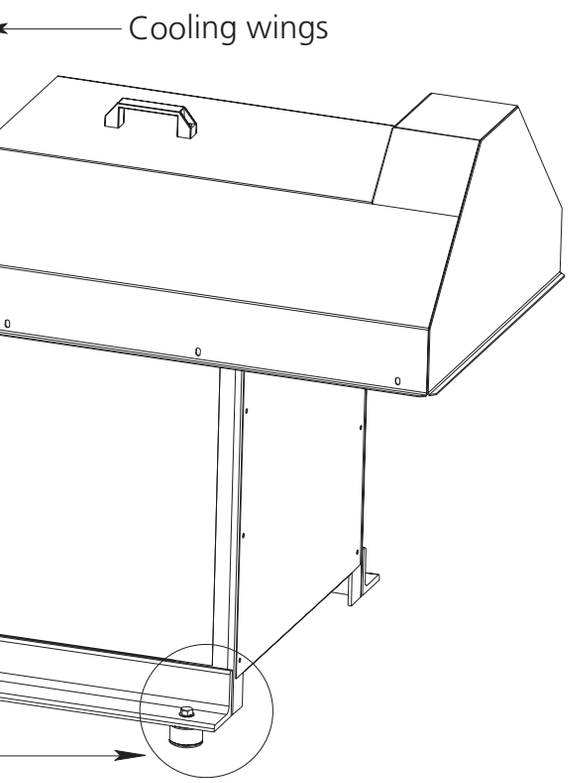

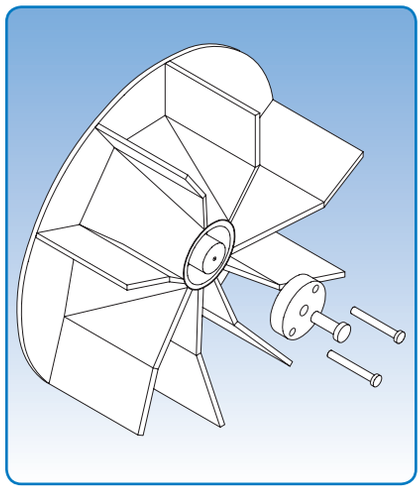

Pullers

Pullers for impellers

The pullers are available in three versions as optional extras for all JK-D and JK-K fans.

No. 1: JK-55K, JK-75K, T-300K, JK-60MT, JK-70MT, JK-80MT, JK-90MT, JK-100MT

No. 2: JK-40D, JK-45K, T-200K, JK-40MTD, JK-50MT

No. 3: JK-20D, JK-22D, JK-25D, JK-30D, JK-30MTD, JK-30MT, JK-35D, JK-30K, JK-40K, JK-40MT

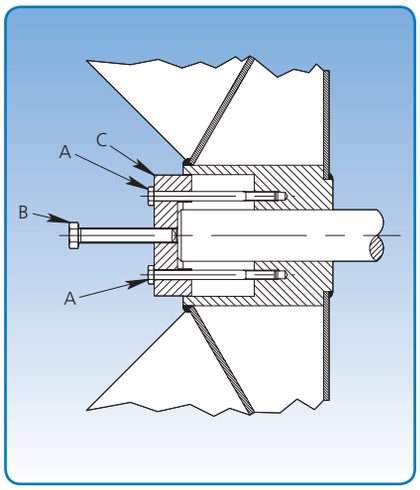

Installation guide

Mounting

Remove taperlock and adaptor ring.

Fit disk C into impeller hub.

Tighten bolts A.

Tighten bolt B.

Pull impeller over the shaft.

Disk C can be used as a drilling template for hubs with no screw holes.

Shaft gaskets for fans

A gasket is fitted between shaft and fan housing. All fan types JK-D, JK-K and T are fitted with this specially developed gasket, which is fitted on the visible part of the shaft between the housing and impeller backplates inside the fan housing. JKF recommend the gasket is replaced if the impeller is removed for any reason.

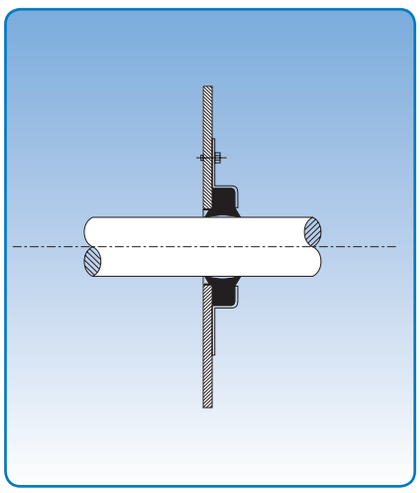

Shaft gasket

Fan systems
Product programme

JKF Industri A/S develops and manufactures components for dust extraction and air filtration systems. The product programme comprises ducts, duct systems, filters and fans. The components are sold to ventilation producers and contractors through a world-wide network of dealers, collaborators and subsidiary companies.

The components are today used by a wide range of businesses within the woodworking, milling, agricultural, plastic, paper, textile, recycling, powder painting, sandblasting, metal working industry including the welding, plasma, laser, tobacco and medical industry etc.

JKF Industri
CLEAN AIR INNOVATION SINCE 1957

JKF Industri A/S
Postboks 100
Rørsangervej 5, Als
9560 Hadsund
Denmark

Phone: + 45 98 58 12 11
Fax: + 45 98 58 11 77

E-mail: info@jkf.dk
Internet: www.jkf.dk

Dealer:

DEVISION 55090