JKF duct systems product programme

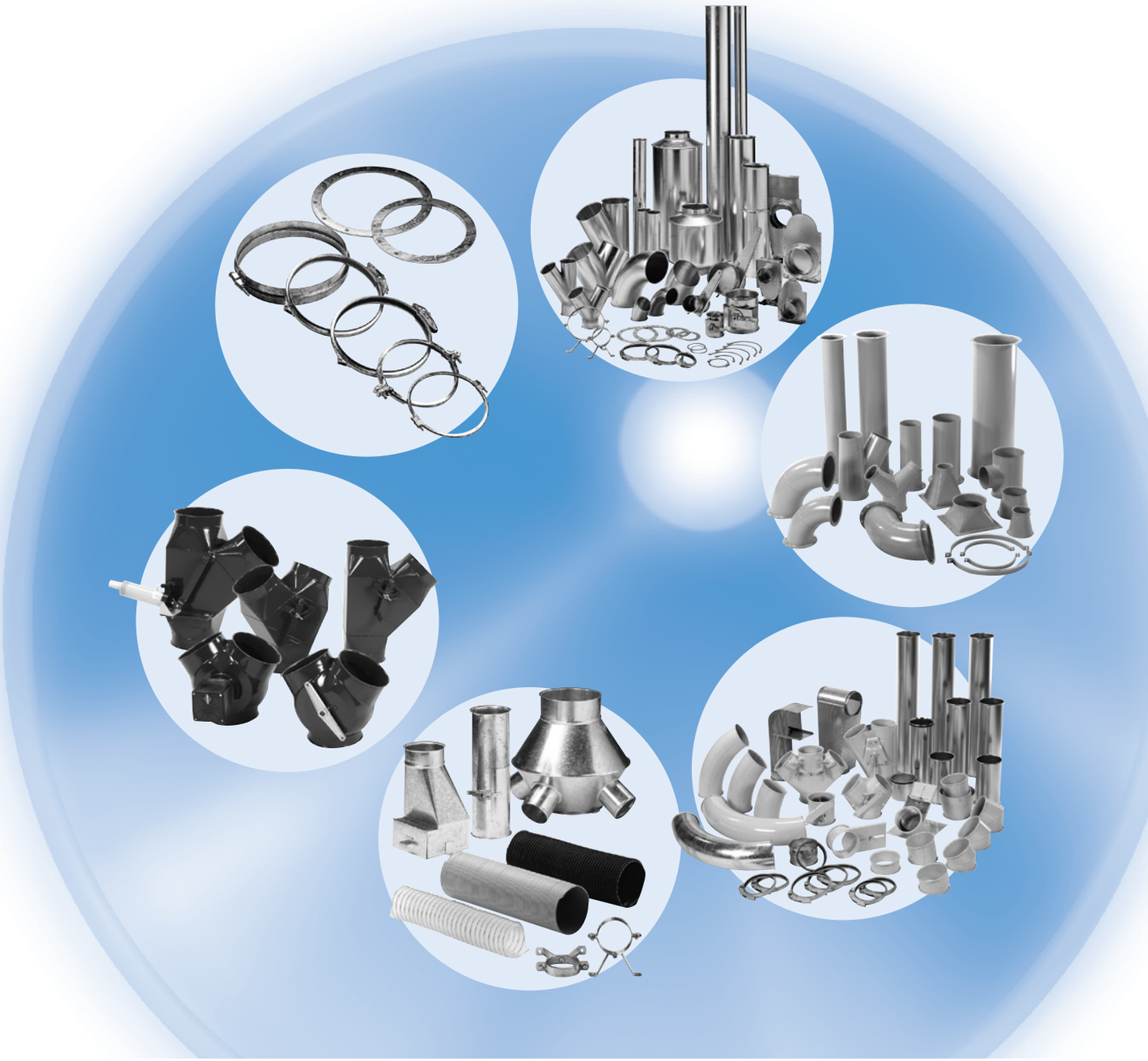

Sales, delivery and payment terms

1. Validity
These sales, delivery and payment terms apply to all offers, orders and deliveries unless otherwise agreed in writing.

2. Offer
All offers are made subject to the goods being unsold. If JKF Industri makes an offer that does not stipulate a specific time for acceptance, the offer will expire if acceptance is not submitted by the purchaser within 8 weeks of the date of the offer.

3. Price
All prices are in DKK and do not include VAT. For countries that are members of the single currency, prices are stated in EUR.

4. Payment
Payment terms are 14 days – 1,5% cash discount of item price excl. VAT or current month + 20 days net calculated from the date of invoice unless otherwise agreed in writing.
If payment is made after the due date, and the delay is no fault of JKF Industri's, JKF Industri is entitled to charge interest on the sum outstanding as from the due date, at a rate equivalent to 1,5% per month or part month.
The purchaser is not entitled to offset any counterclaims against JKF Industri that have not been recognized in writing by JKF Industri, and does not have the right to withhold any of the purchase by reason of counterclaims of any kind.

5. Retention of title
JKF Industri reserves the right, with the limitations resulting from mandatory laws, to retention of title to the item sold until payment of the entire purchase sum, plus any costs incurred, to JKF Industri.
If the item has been sold with a view to later being built into or joined to other objects, the item sold is not covered by the right of retention once that installation or joining has taken place.

6. Delivery
Unless otherwise agreed in writing between the parties, the stated delivery times are EXW JKF Industri's address, with reservation for any delays. In use of EXW, the goods are considered delivered and the order executed from the moment the goods are issued from JKF Industri's warehouse.
Unless otherwise agreed in writing between the parties, JKF Industri has the authority to order the transport on the usual conditions on behalf of the purchaser. The purchaser will continuously bear the risk that transport can be obtained, and if transport cannot be obtained, the goods are considered as delivered from the moment when JKF Industri has given the purchaser access to collect the goods. Dispatch is at the receiver's expense and risk. Any transport insurance is the responsibility of the purchaser. The delivery stipulations agreed between the parties are to be interpreted with reference to the INCOTERMS current at the time of signing the agreement.
The delivery date is set by JKF Industri to the best of their judgment, and if this cannot be kept to, the purchaser will be informed of this and of when, as far as possible, the delivery can be expected to take place. A delay does not give the purchaser the right to cancel the purchase.

7. Packaging
Packaging may only be returned by prior agreement. Return of packaging is at the purchaser's expense and risk.
The purchaser's packaging will be credited after reception and approval of the packaging.

8. Product information
All illustrations, technical drawings and brochures issued by JKF Industri before or after the agreement has been entered into remain the property of JKF Industri, and must be returned to JKF Industri on request. The aforementioned materials may not be passed on without written agreement or misused in any other way.

9. Defect liability in accordance with the Danish Sale of Goods Act and notification of defects
On delivery the purchaser must immediately carry out an examination of the goods in accordance with the Danish Sale of Goods Act. For a period of 12 successive months after delivery has taken place, JKF Industri undertakes to carry out replacement deliveries if there are defects in the order due to material or manufacturing faults.
Defects in goods will be either remedied or replaced at JKF Industri's discretion.
Modification of or interference with the goods without JKF Industri's written consent releases JKF Industri from any obligation.
If the purchaser wishes to complain about any defects, a written claim must be submitted without undue delay, and no later than 14 days after delivery had taken place. JKF Industri is entitled to reject any claims received after expiry of the period stated above.
If JKF Industri receives a prompt claim concerning a defect that is deemed to be covered by these regulations, JKF Industri will remedy the defect without delay.
JKF Industri offers the right for remedy of defects for parts of the order that have been replaced or repaired under the same terms and on the same basis as for the original order. JKF Industri's obligation to remedy defects does not, however, apply to any part of an order more than 1 year after delivery to the purchaser.
Once liability for the order has transferred to the purchaser, JKF Industri bears no responsibility for any defects over and above the obligations specified in these terms.
JKF Industri thus expressly renounces responsibility for any indirect loss such as operating loss, loss of time, loss of profits, etc. that the defect may have caused the purchaser.
Any compensation claim against JKF Industri may not exceed the invoice amount for the product sold.
JKF Industri is not liable for any operating loss, loss of profits or other indirect loss in consequence of the agreement, including indirect losses arising as a result of delays or defects with regard to the goods sold.
The following circumstances are intended as examples of events resulting in exemption from liability should they occur after the signing of the contract and prevent its fulfilment:
Industrial disputes, strikes, lockout or any other circumstance outside the control of the parties such as fire, war, mobilisation, unexpected military call-up, acts of sabotage, requisitioning, confiscation, currency restrictions, import ban, export ban, riots, unrest, fuel shortage, general scarcity of goods, restrictions in power supplies and defects in deliveries from sub-suppliers or delays with such deliveries as a result of any of the aforementioned circumstances.
It should be specifically noted that the above is not an exhaustive list of examples, and there may be other examples that come under limitation of liability.
If delivery is temporarily delayed by one or more of the aforementioned circumstances, the delivery time will be correspondingly postponed.

10. Return
Items sold will only be accepted for return by prior agreement. Return will be at the purchaser's expense and risk and should include reference to JKF Industri's invoice no. and the date of the original delivery.
Returned items will be credited after inspection by the Goods Received department, normally at 85% of the invoice price less costs for inspection and preparation.
If JKF Industri is charged for shipping costs etc., JKF Industri is entitled to demand these be refunded by the purchaser and to offset these against any claims by the purchaser against JKF Industri. After completion of repairs or in the case of replacement, delivery will take place from JKF Industri as per point 6.

11. Product liability
JKF Industri is not liable for damage to property or effects that occurs while the item is in the possession of the purchaser. Neither is JKF Industri liable for damage to products manufactured by the purchaser or to products of which these form a part. JKF Industri is not liable for any operating loss, lost earnings or other indirect loss.
To the extent that product liability may be imposed on JKF Industri with regard to third parties, the purchaser is obliged to compensate JKF Industri to the same extent that JKF Industri's liability is limited as per the above.
These limitations to JKF Industri's liability do not apply if JKF Industri is guilty of gross negligence.
If a third party puts forward a claim against one of the parties for compensation with reference to this point, this party must immediately inform the other party about this. The purchaser is obliged to allow themselves to be sued at the same court that handles the claims for compensation against JKF Industri in consequence of damage that is alleged to have been caused by a defect in one of JKF Industri's deliveries.
JKF Industri's liability for product damage may at no time exceed the cover amount of JKF Industri's product liability insurance.

12. Applicable law and venue
Any disagreement between the parties is to be finally settled in arbitration by the "common court of judgement and arbitration at the Copenhagen Stock Exchange" or by the court at 9575 in Terndrup, irrespective of whether the case is a High Court case by nature.
All disagreements between the parties must be settled according to Danish law, including the Danish Sale of Goods Act. The International Sale of Goods Act (CISG) is to be neither wholly nor partially applied.

Table of contents

JKF Duct Systems

JKF's programme includes galvanised duct systems and welded duct systems in 2 and 3 mm material thickness, and thus represent the basic element in extraction and transport of particles and air.
JKF's duct systems have a circular cross section, with a wide range of ducts, bends, trouser-, branch-, end-, transition and taper pieces, throttle valves, diverters, jet- and rain caps etc. to ensure individual adaptation and a high degree of flexibility.
This catalogue covers JKF's standard components for the following dimensions: ø80 – ø1000 mm.
Special customised components are available to order.

Laser welded and longitudinally lock formed duct system, galvanised

Sliding dampers, throttle valves

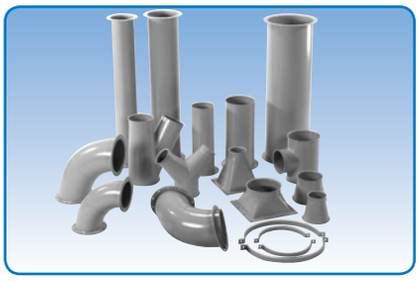

2 and 3 mm duct system

Diverters

Galvanised duct system
The galvanised duct system includes all components necessary for a complete and flexible extraction solution and can be used for particle transport, welding extraction etc.

- laser welded ducts
- longitudinally lock formed ducts
- pressed bends
- tight sliding dampers
- branch- and trouser pieces
- throttle valves
- adapters

ø80 - ø400 mm ducts are laser welded. Other sizes are longitudinally lock formed ducts. Bends, branch pieces, shaped pieces etc are assembled with overlap and point-welded. Ducts and shaped pieces are manufactured from hot dip galvanised steel sheet: Dogal 280, DX 51 D, DX 54 D or DX 56 D with material thickness from 0.75 mm – 1.25 mm. Surface treatment class is Z 275 - i.e. zinc coating is minimum 275 g/m² double sided.
Pull rings [f.b] are used as standard joint assembly for rapid assembly and separation on ø80 mm to ø800 mm ducts, and loose flanges [f.b.m.fl] are used for ø850 mm to ø1000 mm ducts.

2 and 3 mm duct system
The 2 and 3 mm system includes all components necessary for a complete and flexible extraction solution and can be used for particle transport, welding extraction etc.

- laser welded ducts
- plasma welded ducts
- pressed bends
- tight sliding dampers
- branch- and trouser pieces
- throttle valves
- diverters – pressed and welded
- adapters

The heavy duty sheet thickness means that this system is ideal for applications using high pressure or highly abrasive particles.
ø80 - ø400 mm ducts are laser welded. Other sizes are plasma welded. Bends, diverters, branch- and trouser pieces, shaped pieces etc are fully welded.
Ducts and shaped pieces are made of DC 01 or DOMEX 240 sheet metal with a thickness of 2 – 3 mm.
Pull rings [f.b] are used as standard joint assembly for rapid assembly and separation on

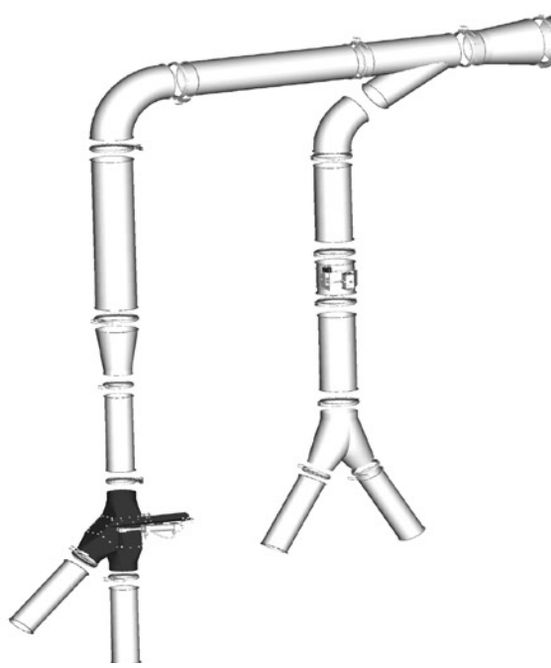

ø80 mm to ø600 mm ducts, and loose flanges [m.fl] are used for ø650 mm to ø1000 mm ducts.
The duct system can be supplied with no surface treatment, powder coated primed (RAL

JKF Duct Systems

7032), or powder coated with zinc primer and top coat paint.
Standard colour is RAL 5010, but other colours and hot dip/electro-galvanised finishes are available at an additional price.

Surface treatment
JKF has installed a state-of-the art automatic 3-zone powder coating plant, which ensures high, uniform quality on all painted items.

Benefits of powder coating:

- High quality, impact and scratch-resistant surface
- High material usage – no evaporation
- Environment protection - no solvents

Primed duct systems fulfil corrosion class C2, cf. ISO 12944 and have received the following surface treatment:

1. Cleaning and iron phosphate finish at 50-55°C
2. Rinsed in water at 20-35°C
3. Rinsed with demineralised water at 15-30°C
4. Dried at 120-130°C
5. Robot-applied zinc epoxy-primer; layer thickness: 60-80 my
6. Primer hardening at 180-190°C.

Components with welded flanges are sandblasted to SA 2.5 before application of the above.
Duct systems can also be supplied painted (standard colour RAL 5010), with the before mentioned surface treatment but with a layer thickness of 80-120 my. If a higher corrosion class is required, please specify when ordering. JKF can supply products which fulfil up to corrosion class C4, cf. ISO 12944.

Temperature range
Both duct systems can be used as standard at temperatures from -30°C to 80°C. Higher temperature tolerance available to order.

Tightness
Leaks in a duct system mean loss of capacity and undesirable noise. The JKF duct systems are manufactured with minor tolerances, to ensure tight joints. Use of pull rings or rapid lock pull rings ensures that the duct section fulfills tightness class C, the best tightness class within industrial extraction.
Joint sealing compound or rubber flanges (EPDM) are recommended for flange assemblies to ensure tight joins. Correct assembly with sealing compound will result in assemblies which fulfil the requirements for tightness class C.
See appendix 1 page 71.

Quality assurance
JKF's quality assurance system is certified according to DS/ISO9001 (DS/EN29001).

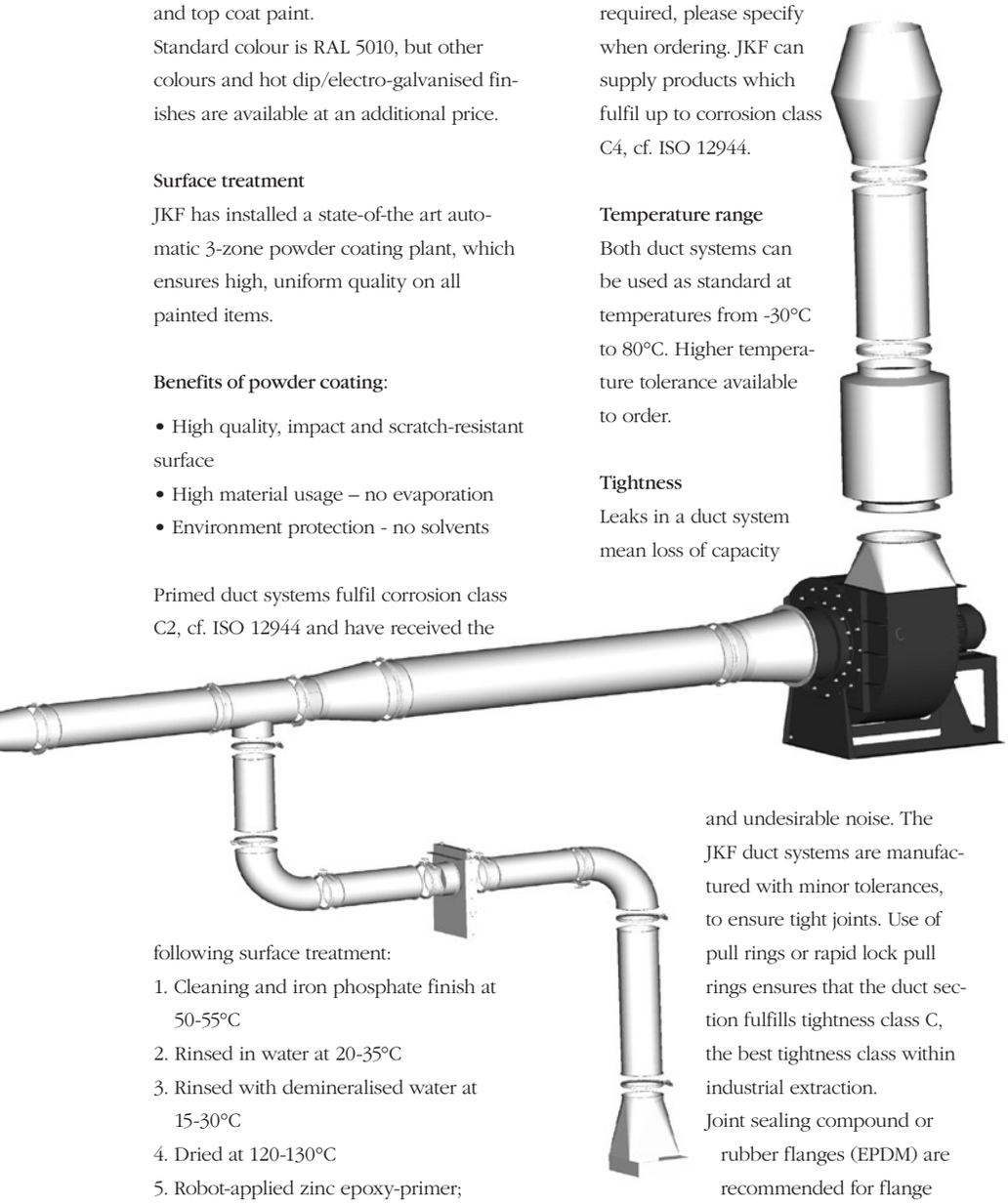

Jet- and rain caps

Pull rings, rapid lock pull rings, flanges

Accessories: Sanding tables, clip bands etc.

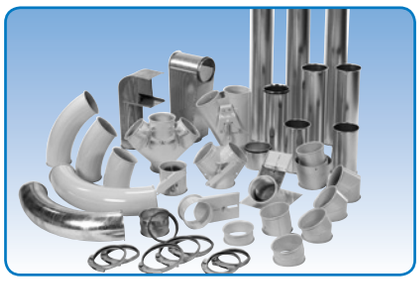

JK-6" duct system

Assembly methods, galvanised duct systems

Assembly methods
The high, uniform quality of JKF's duct systems along with efficient assembly and sealing ensures quick and easy assembly, with the ability to perform subsequent modifications.

The components for the galvanised duct system are made for a range of different assembly methods, which are also suitable for other systems.
Galvanised duct systems can be supplied to order for assembly with:

- pull rings [f.b]: ø80 – ø500 mm
- wide pull rings [f.bb]: ø150 – ø750 mm
- rapid lock pull rings with handle [f.lyn]: ø80– ø400 mm
- rapid lock pull rings with bolt [f.lyn]: ø450 – ø600 mm
- loose flanges [f.b.m.fl]: ø80 – ø1000 mm
- hoses [f.sl]: ø80 – ø400 mm
- smooth [gl]: ø80 – ø1000 mm

The assembly method depends on duct dimensions, strength, tightness, noise and installation requirements.

Tightness can be increased when using ø80 - ø300 mm pull rings by fitting a U-shaped rubber gasket ring (EPDM) on the f.b. edge. Rapid lock pull rings have a fixed liner (EPDM), which ensures an airtight join.

Assembly method must be stated when placing order. Assembly methods are stated under the illustrations.

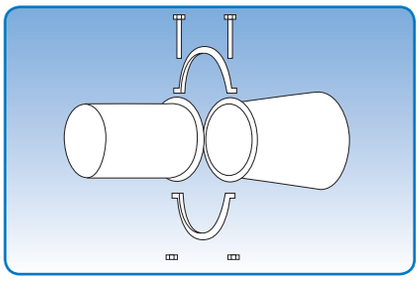
For pull rings [f.b]

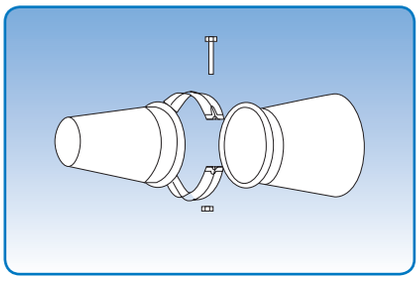
For wide pull rings [f.bb]

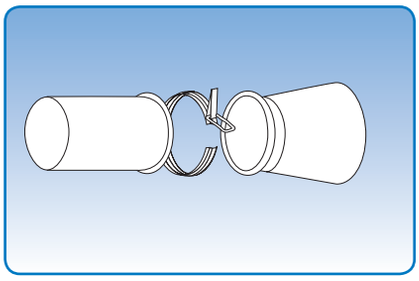
For rapid lock pull rings [f.lyn]

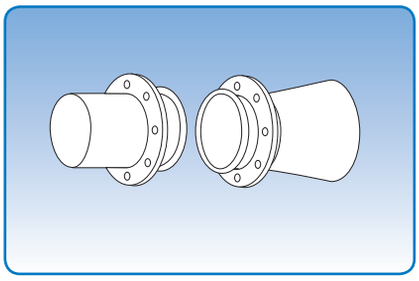
With loose flange fitted [f.b.m.fl]

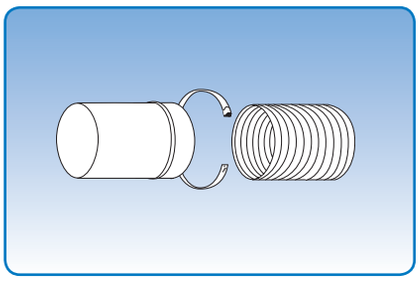
For hoses [f.sl]

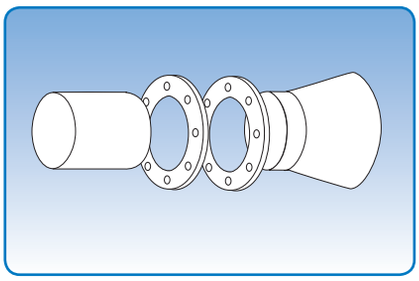
For flanges [f.fl]

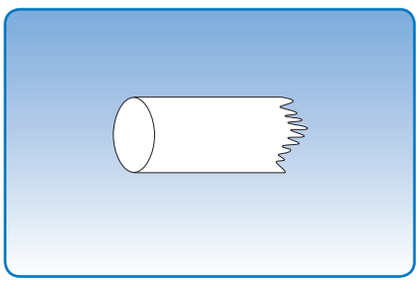
Smooth [gl]

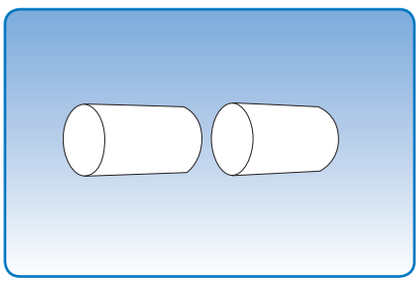
Conical [k]

Assembly methods, 2 and 3 mm duct systems

Assembly methods

The high, uniform quality of JKF's duct systems along with efficient assembly and sealing ensures quick and easy assembly, with the ability to perform subsequent modifications.

The components for 2 and 3 mm duct system are made for a range of different assembly methods, which are also suitable for other systems. 2-3 mm duct systems can be supplied to order for assembly with:

- 2 and 3 mm pull rings [f.b]: ø80 – ø600 mm
- rapid lock pull rings with handle [f.lyn]: ø80– ø400 mm
- rapid lock pull rings with bolt [f.lyn]: ø450 – ø600 mm
- loose flanges [f.b.m.fl]: ø80 – ø600 mm
- welded flanges [m.fl]: ø80 – ø1000 mm
- direct flanges [d.fl]: ø300 – ø1000 mm

The assembly method depends on duct dimensions, strength, tightness, noise and installation requirements.

Tightness can be increased when using ø80 - ø300 mm pull rings by fitting a U-shaped rubber gasket ring (EPDM) on the f.b. edge. ø315 – ø600 mm pull rings can be supplied with integral seal at an additional price. Rapid lock pull rings have a fixed liner (EPDM), which ensures an airtight join.

Ducts with rapid lock pull rings, loose flanges or direct flanges assembly methods are fitted with a straight duct-shaped end piece with a length of min. 50 mm.

Assembly method must be stated when placing order. Assembly methods are stated under the illustrations.

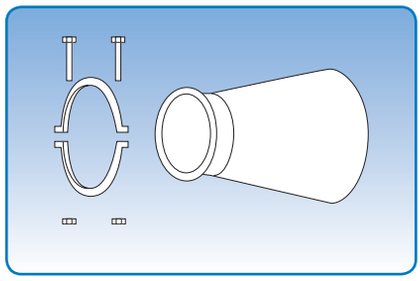

For pull rings [f.b]

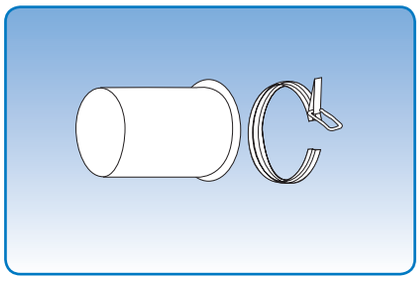

For rapid lock pull rings [f.lyn]

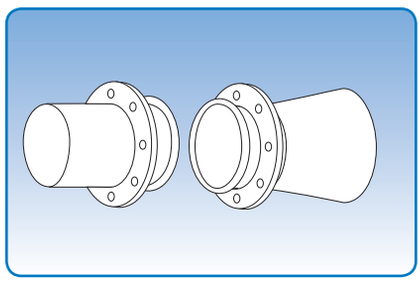

With loose flange fitted [f.b.m.fl]
To max. ø600 mm diameter in 2.00 mm

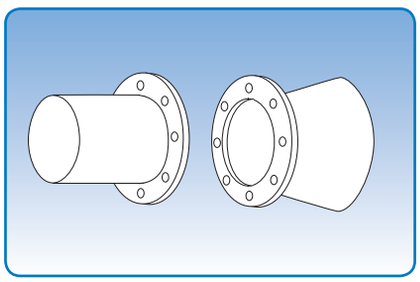

With welded flanges [m.fl]

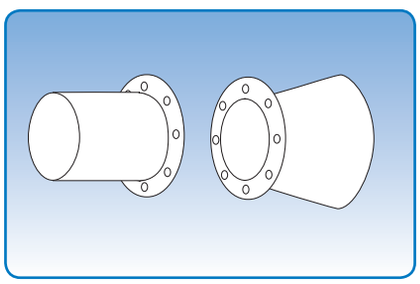

With direct flanges [d.fl]

Laser welded and longitudinally lock formed ducts, galvanised

Diameter: ø80 – ø1000 mm.

Laser welded and longitudinally lock formed ducts are galvanised and made from 0.75 mm, 0.90 mm or 1.00 mm sheet metal (s). Ducts are also available in 1.25 mm sheet metal.

Also available in other qualities and dimensions to order.

Ducts of up to ø400 mm diameter are supplied as standard laser welded in lengths of 0.5 m, 1.0 m and 2.0 m. Other sizes from ø450 mm diameter are supplied as longitudinally lock formed ducts in standard lengths of 0.5 m, 1.0 m and 2.0 m.

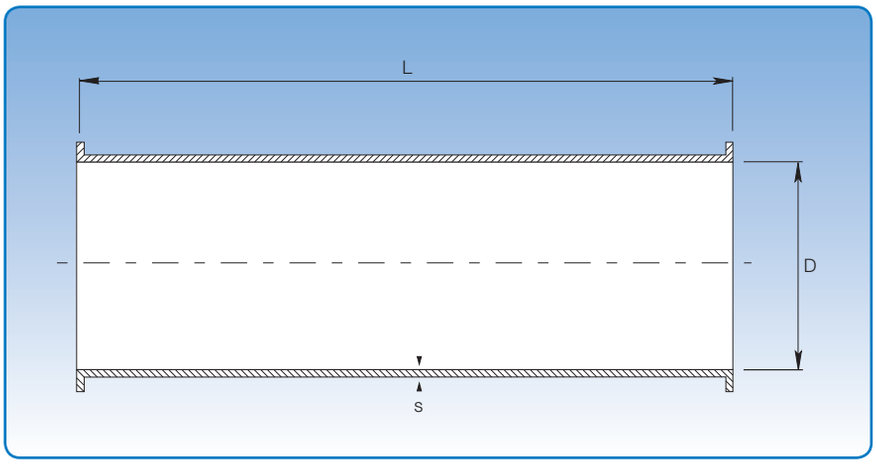

Dimensional specifications are given in the table below.

Dimensions							
D mm	s mm	Item no. L = 0.5 m	Weight at L = 0.5 m kg	Item no. L = 1.0 m	Weight at L = 1.0 m kg	Item no. L = 2.0 m	Weight at L = 2.0 m kg
Laser welded ducts							
80	0,75	10701091	0,80	10701191	1,60	10701291	2,90
100	0,75	10711091	1,00	10711191	2,00	10711291	3,70
120	0,75	10721091	1,20	10721191	2,40	10721291	4,40
125	0,75	10731091	1,25	10731191	2,50	10731291	4,60
140	0,75	10741091	1,40	10741191	2,80	10741291	5,10
150	0,75	10751091	1,50	10751191	3,00	10751291	5,50
160	0,75	10761091	1,60	10761191	3,20	10761291	5,80
180	0,75	10771091	1,75	10771191	3,50	10771291	6,70
200	0,75	10781091	2,00	10781191	4,00	10781291	7,20
225	0,75	10791091	2,25	10791191	4,50	10791291	8,20
250	0,75	10801091	2,50	10801191	5,00	10801291	9,00
275	0,75	108010199	2,75	108011199	5,50	108012199	11,00
300	0,75	10811091	2,85	10811191	5,70	10811291	11,00
315	0,75	10821091	3,00	10821191	6,00	10821291	12,00
350	0,75	10831091	3,25	10831191	6,50	10831291	13,00
375	0,75	10839091	3,25	10839191	6,50	10839291	13,00
400	0,90	10841091	4,50	10841191	9,00	10841291	18,00
Longitudinally lock formed ducts							
450	0,90	1085101	5,15	1085111	10,30	1085121	20,60
475	0,90	1085901	5,43	1085911	10,85	1085921	21,70
500	0,90	1086101	5,70	1086111	11,40	1086121	22,80
550	0,90	1087101	6,25	1087111	12,50	1087121	25,00
600	0,90	1088101	6,80	1088111	13,60	1088121	27,20
630	0,90	1089101	7,20	1089111	14,40	1089121	28,80
650	0,90	1090101	7,50	1090111	15,00	1090121	30,00
700	0,90	1091101	8,00	1091111	16,00	1091121	32,00
750	0,90	1092101	8,50	1092111	17,00	1092121	34,00
800	1,00	1093101	10,00	1093111	20,00	1093121	40,00
850	1,00	1094105	22,20	1094115	32,95	1094125	54,45
900	1,00	1095105	23,60	1095115	35,10	1095125	48,10
950	1,00	1096105	24,99	1096115	37,24	1096125	61,74
1000	1,00	1097105	26,38	1097115	39,38	1097125	65,38

Item numbers designated with D ≤ 800 mm are for ducts assembled with pull rings [f.b]. Item numbers designated D ≥ 850 mm are for ducts with loose flanges [f.b.m.fl].
Ducts are also available for other assembly methods. See p. 6 for assembly methods.

Telescopic ducts, galvanised

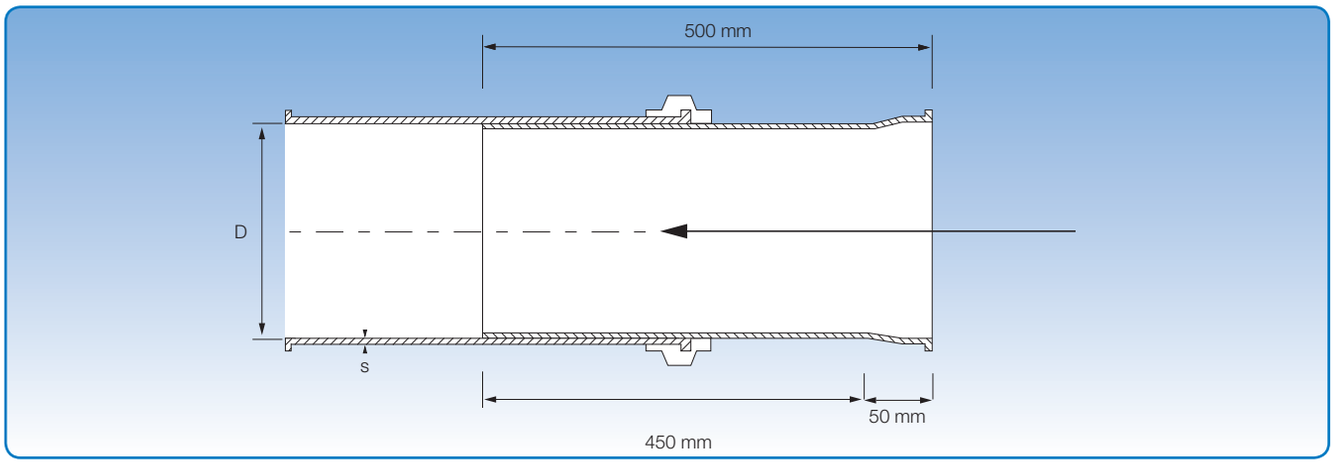

Dimensional specifications are given in the table below.

Diameter: ø80 - ø500 mm.

Telescopic ducts are made from 0.75 mm and 0.90 mm galvanised sheet metal and supplied with rapid lock pull rings, incl. rubber seal.

	Dimensions		
Item no.	D mm	s mm	Weight kg
1099389	80	0,75	0,99
1099394	100	0,75	1,20
1099401	120	0,75	1,39
1099411	125	0,75	1,45
1099421	140	0,75	1,60
1099431	150	0,75	1,70
1099441	160	0,75	1,80
1099451	180	0,75	2,07
1099461	200	0,75	2,29
1099471	225	0,75	2,53
1099481	250	0,75	2,78
1099491	275	0,75	3,07
1099501	300	0,75	3,37
1099511	315	0,75	3,58
1099521	350	0,75	3,95
1099531	400	0,90	5,00
1099541	450	0,90	5,70
1099551	500	0,90	6,30

The item numbers stated are for telescopic ducts assembled using pull rings [f.b].

Telescopic ducts are also available for other assembly methods. See p. 6 for assembly methods.

Ducts with access door, galvanised

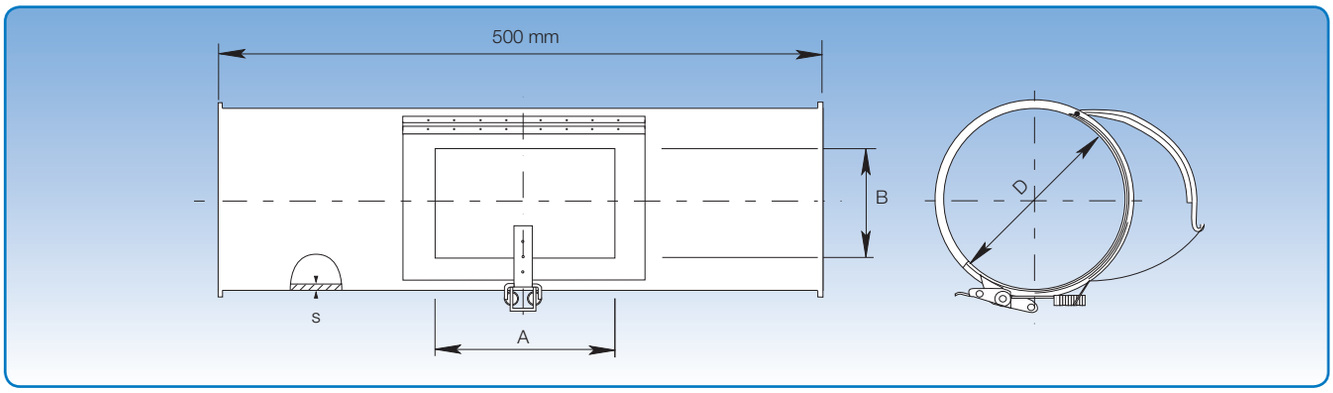

Dimensional specifications are given in the table below.

Diameter: ø80 – ø1000 mm.

Access doors are made of 1.25 mm galvanised sheet metal, such that the inside is smooth and has a close fit.

	Dimensions			
Item no.	D mm	s mm	B × A mm	Weight kg
4670371	80	0,90	80 x 150	0,80
4671371	100	0,90	100 x 150	1,00
4672371	120	0,90	100 x 150	1,20
4673371	125	0,90	100 x 150	1,25
4674371	140	0,90	100 x 150	1,40
4675371	150	0,90	100 x 150	1,50
4676371	160	0,90	100 x 150	1,60
4677371	180	0,90	100 x 150	1,75
4678371	200	0,90	100 x 150	2,00
4679371	225	0,90	100 x 150	2,25
4680371	250	0,90	100 x 150	2,50
4680379	275	0,90	100 x 150	2,65
4681371	300	0,90	100 x 150	2,85
4682371	315	0,90	100 x 150	3,00
4683371	350	0,90	150 x 200	3,25
4684371	400	0,90	150 x 200	4,50
4685371	450	0,90	150 x 200	5,15
4686371	500	0,90	150 x 200	5,70
4687371	550	0,90	150 x 200	6,25
4688371	600	0,90	150 x 200	6,80
4689371	630	0,90	150 x 200	7,20
4690371	650	0,90	150 x 200	7,50
4691371	700	0,90	150 x 200	8,00
4692371	750	0,90	150 x 200	8,50
4693371	800	1,00	150 x 200	10,00
4694371	850	1,00	150 x 200	10,75
4695371	900	1,00	150 x 200	11,50
4696371	950	1,00	150 x 200	12,25
4697371	1000	1,00	150 x 200	13,00

Item numbers designated with D ≤ 800 mm are for ducts assembled with pull rings [f.b]. Item numbers designated D ≥ 850 mm are for ducts with loose flanges [f.b.m.fl].
Ducts with access doors are also available for other assembly methods. See p. 6 for assembly methods.

Ducts with cleaning spigot, galvanised

Diameter: ø100 - ø400 mm.

The PVC cover is easy to fit and remove. All cleaning spigots have a ø100 mm opening.

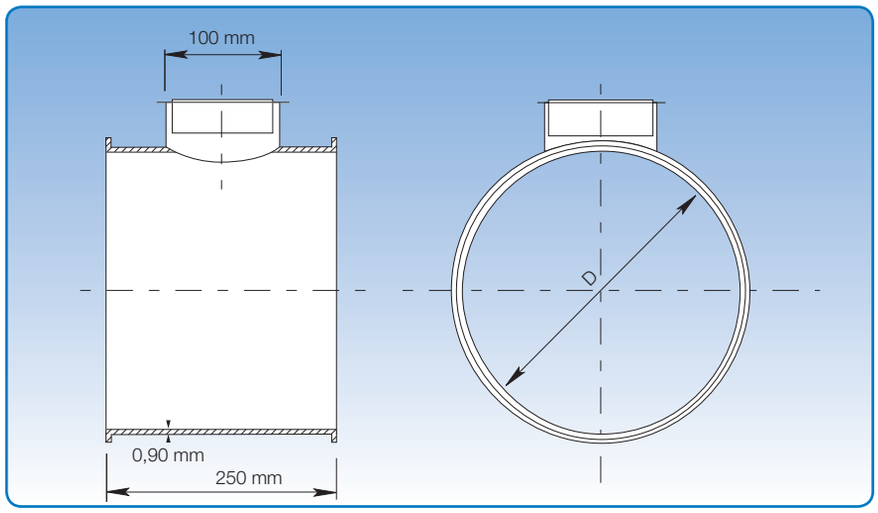

Dimensional specifications are given in the table below.

Dimensions		
Item no.	D mm	Weight kg
4671101	100	0,50
4671102	120	0,60
4671103	125	0,65
4671104	140	0,70
4671105	150	0,75
4675101	160	0,80
4675102	180	0,85
4675103	200	1,00
4675104	225	1,15
4675105	250	1,25
4675106	275	1,35
4680101	300	1,45
4680102	315	1,50
4680103	350	1,65
4680104	400	2,25

The item numbers stated are for ducts with cleaning spigots assembled using pull rings [f.b].
Ducts with cleaning spigots are also available for other assembly methods. See p. 6 for assembly methods.

Pressed bends, galvanised

Diameter: ø80 - ø400 mm.

Galvanised bends are made of 1.00 mm sheet metal.

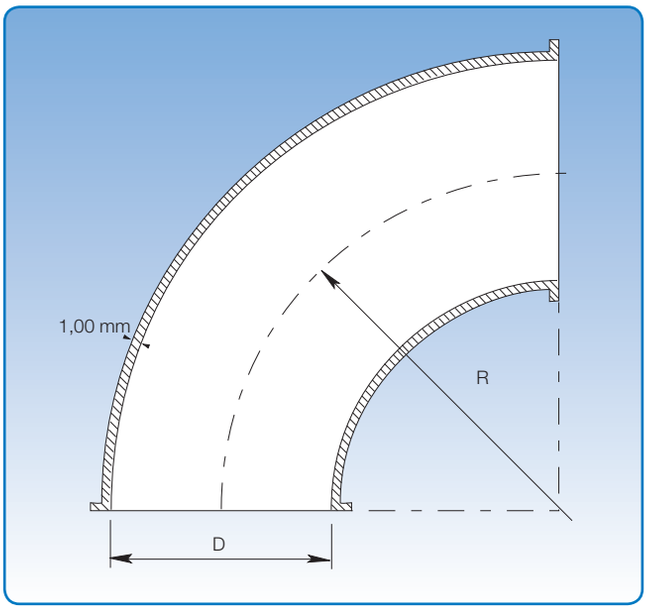

Dimensional specifications are given in the table below. Diameter = (D). R = 1.5 x D for all dimensions.

Dimensions

	90°		60°		45°		30°		15°		7.5°	
D mm	Item no.	kg	Item no.	kg	Item no.	kg	Item no.	kg	Item no.	kg	Item no.	kg
80	1170192	0,44	1170162	0,24	1170142	0,20	1170132	0,12	1170112	0,10	1170102	0,10
100	1171192	0,62	1171162	0,40	1171142	0,30	1171132	0,20	1171112	0,14	1171102	0,13
120	1172192	0,90	1172162	0,60	1172142	0,40	1172132	0,30	1172112	0,18	1172102	0,16
125	1173192	0,90	1173162	0,65	1173142	0,45	1173132	0,32	1173112	0,18	1173102	0,18
140	1174192	1,10	1174162	0,80	1174142	0,55	1174132	0,40	1174112	0,24	1174102	0,20
150	1175192	1,50	1175162	0,90	1175142	0,70	1175132	0,50	1175112	0,25	1175102	0,20
160	1176192	1,70	1176162	1,10	1176142	0,80	1176132	0,50	1176112	0,30	1176102	0,29
180	1177192	2,00	1177162	1,30	1177142	1,00	1177132	0,70	1177112	0,40	1177102	0,30
200	1178192	2,50	1178162	1,85	1178142	1,25	1178132	1,00	1178112	0,50	1178102	0,35
225	1179192	3,00	1179162	2,00	1179142	1,60	1179132	1,20	1179112	0,60	1179102	0,37
250	1180192	4,00	1180162	3,00	1180142	2,00	1180132	1,50	1180112	0,75	1180102	0,50
275	11801929	4,80	11801629	3,60	11801429	2,40	11801329	1,80	11801129	0,80	11801029	0,55
300	1181192	5,90	1181162	3,90	1181142	2,90	1181132	2,00	1181112	0,90	1181102	0,60
315	1182192	5,90	1182162	3,80	1182142	2,95	1182132	2,00	1182112	1,12	1182102	0,55
350	1183192	7,30	1183162	4,80	1183142	3,70	1183132	2,55	1183112	1,30	1183102	1,00
400	1184192	10,20	1184162	6,70	1184142	5,10	1184132	3,60	1184112	1,60	1184102	1,20

The item numbers stated are for bends assembled using pull rings [f.b].

Bends are also available for other assembly methods. See p. 6 for assembly methods.

Segment bends, galvanised

Diameter: ø450 - ø1000 mm.

Galvanised segment bends are made from 0.90 mm and 1.00 mm sheet metal (s).

They are available in other radii and dimensions to order.

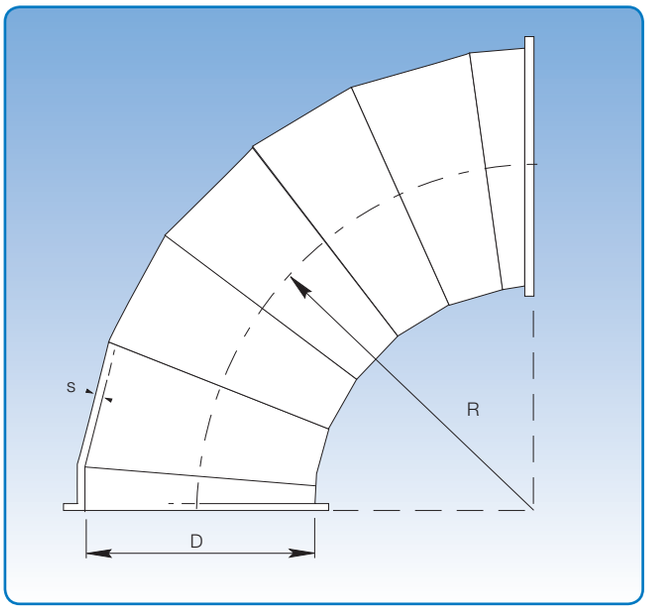

Dimensional specifications are given in the table below.
R = 1.5 x D for all dimensions.

Dimensions													
		90°		60°		45°		30°		15°		7.5°	
D mm	s mm	Item no.	kg	Item no.	kg	Item no.	kg	Item no.	kg	Item no.	kg	Item no.	kg
450	0,90	1185792	12,00	1185762	9,00	1185742	6,00	1185732	4,50	1185712	2,25	1185702	1,10
500	0,90	1186792	15,00	1186762	11,20	1186742	7,50	1186732	5,60	1186712	2,80	1186702	1,40
550	0,90	1187792	18,00	1187762	13,50	1187742	9,00	1187732	6,80	1187712	3,40	1187702	1,70
600	0,90	1188792	21,50	1188762	16,10	1188742	10,75	1188732	8,05	1188712	4,00	1188702	2,00
630	0,90	1189792	22,40	1189762	16,80	1189742	11,20	1189732	8,40	1189712	4,20	1189702	2,10
650	0,90	1190792	25,00	1190762	18,80	1190742	12,50	1190732	9,40	1190712	4,70	1190702	2,35
700	0,90	1191792	29,00	1191762	21,80	1191742	14,50	1191732	10,90	1191712	5,40	1191702	2,70
750	0,90	1192792	33,00	1192762	24,80	1192742	16,50	1192732	12,40	1192712	6,20	1192702	3,10
800	1,00	1193792	37,50	1193762	28,10	1193742	18,75	1193732	14,05	1193712	7,00	1193702	3,50
850	1,00	1194792	42,50	1194762	32,00	1194742	21,25	1194732	16,00	1194712	8,00	1194702	4,00
900	1,00	1195792	48,00	1195762	36,00	1195742	24,00	1195732	18,00	1195712	9,00	1195702	4,50
950	1,00	1196792	53,00	1196762	39,80	1196742	26,50	1196732	20,00	1196712	10,00	1196702	5,00
1000	1,00	1197792	59,00	1197762	44,00	1197742	29,50	1197732	22,00	1197712	11,00	1197702	5,50

Item numbers designated D ≤ 800 mm are for segment bends assembled using pull rings [f.b]. Item numbers designated D ≥ 850 mm are for ducts with loose flanges [f.b.m.fl].

Segment bends are also available for other assembly methods. See p. 6 for assembly methods.

30° straight branch pieces, galvanised

Diameter: ø80 – ø1000 mm.

Galvanised branch pieces are made of 0.90 mm sheet metal.

When assembled with loose flanges, [f.b.m.fl], L1 is extended by 2 x 50 mm.

State A-, B- and C dimensions when ordering. Options are limited by A = C, and A ≥ B. A = C must be max. 1000 mm.

The branch determines the length of L1. Branch pieces are always straight with the branch centrally located.

L1, L2 and L3 can be calculated using the stated formulas.

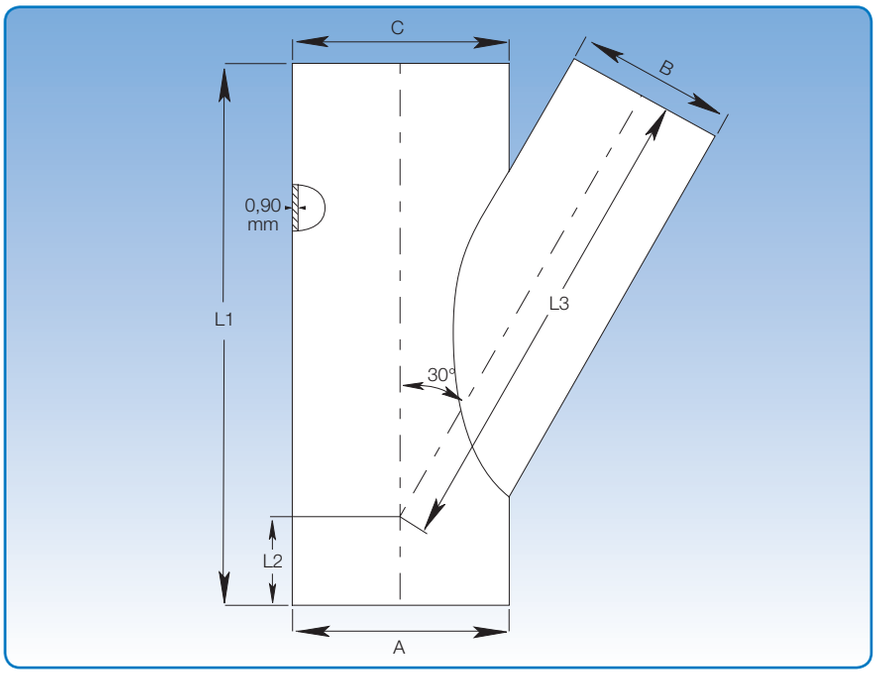

Calculating L2 and L3:

L1 = see table

$$L2 = \frac{1}{2} \times \left(L1 - \frac{A}{tg\propto}\right)$$

$$L3 = \frac{L1-L2}{cos\propto} - \left(\frac{B}{2} \times tg\propto\right)$$

Example:

A = 650, B = 400, C = 650

L1 = 1050 mm

$$L2 = 0{,}5 \times \left(1050 - \frac{650}{tg\ 29{,}7}\right) = 0{,}5 \times (1050 - 1139{,}57)$$

L2 = - 44,79 ~ - 45 mm

$$L3 = \frac{1050 + 45}{cos\ 29{,}7} - \left(\frac{400}{2} \times tg\ 29{,}7\right) = 1260{,}60 - 114{,}08$$

L3 = 1146,52 ~ 1147 mm

Dimensions					
A = C mm	B mm	L1 mm	L2 mm	L3 mm	∝
Select (80 - 1000)	80	350	Calculate	Calculate	28,0
	100	350			28,8
	120	350			28,8
	125	400			29,0
	140	450			29,1
	150	450			29,2
	160	450			29,2
	180	550			29,3
	200	550			29,3
	225	600			29,4
	250	750			29,5
	275	750			29,6
	300	750			29,6
	315	850			29,6
	350	950			29,6
	400	1050			29,7
	450	1250			29,7
	500	1250			29,7
	550	1450			29,8
	600	1450			29,8
	630	1650			29,8
	650	1650			29,8
	700	1650			29,8
	750	1850			29,9
	800	1850			29,9
	850	2050			29,9
	900	2050			29,9

45° straight branch pieces, galvanised

Diameter: ø80 – ø1000 mm.

Galvanised branch pieces are made of 0.90 mm sheet metal.

When supplied with loose flanges, [f.b.m.fl], L1 is extended by 2 x 50 mm.

State A-, B- and C dimensions when ordering. Options are limited by A = C, and A ≥ B. A = C must be max. 1000 mm.

The branch determines the length of L1. Branch pieces are always straight with the branch centrally located.

L1, L2 and L3 can be calculated using the stated formulas.

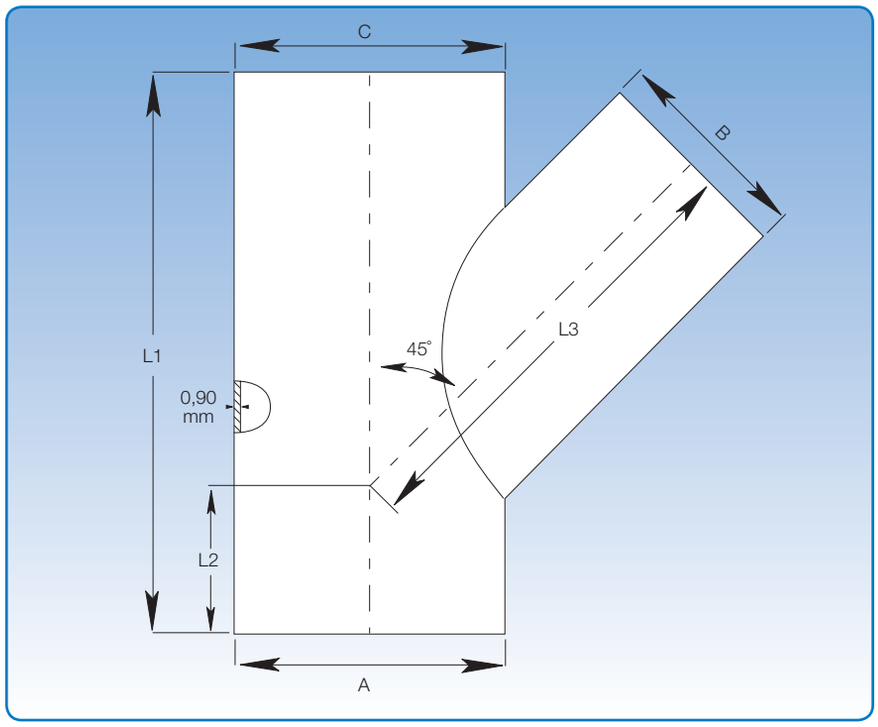

Calculating L2 and L3:

L1 = see table

$$L2 = \frac{1}{2} \times \left(L1 - \frac{A}{tg\propto}\right)$$

$$L3 = \frac{L1-L2}{\cos\propto} - \left(\frac{B}{2} \times tg\propto\right)$$

Example:

A = 500, B = 450, C = 500

L1 = 950 mm

$$L2 = 0{,}5 \times \left(950 - \frac{500}{tg\ 44{,}7}\right) = 0{,}5 \times (950 - 505{,}26)$$

L2 = - 222,37 ~ - 222 mm

$$L3 = \frac{950 + -222}{\cos 44{,}7} - \left(\frac{450}{2} \times tg\ 44{,}7\right) = 1024{,}19 - 222{,}66$$

L3 = 801,53 ~ 802 mm

Dimensions

A = C mm	B mm	L1 mm	L2 mm	L3 mm	∝
Select (80 - 1000)	80	300	Calculate	Calculate	43,8
	100	300			43,8
	120	350			44,0
	125	350			44,0
	140	350			44,1
	150	400			44,2
	160	400			44,2
	180	400			44,3
	200	450			44,4
	225	500			44,5
	250	500			44,5
	275	600			44,6
	300	600			44,6
	315	600			44,6
	350	700			44,7
	400	800			44,7
	450	950			44,7
	500	950			44,8
	550	1150			44,8
	600	1050			44,8
	630	1150			44,8
	650	1150			44,8
	700	1300			44,8
	750	1300			44,8
	800	1450			44,9
	850	1450			44,9
	900	1650			44,9

30° conical branch pieces, galvanised

Diameter A: ø100 - ø1000 mm.

Galvanised branch pieces are made of 0.90 mm sheet metal.

L1 will be extended by 2 x 50 mm if the branch piece is supplied with loose flanges [f.b.m.fl], rapid lock pull rings [f.lyn] or wide pull rings [f.bb].

State branch piece A, B- and C dimensions when ordering. A, B and C can be combined to order; although branch B determines length L1 as stated in the table.

Maximum diameter reduction between A and C is 200 mm. For B applies: B < (A+C)/2.

The largest branch will determine L1 for double branch pieces.

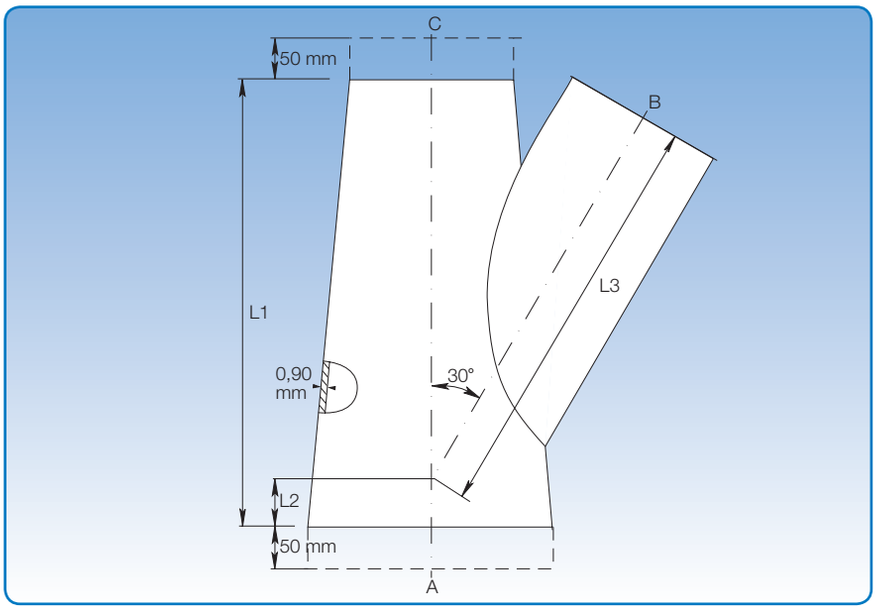

Calculating L2 and L3:

L1 = See table

$$L2 = \left(\frac{L1}{2}\right) - \left(\frac{A + C}{4\ tg\propto}\right)$$

$$L3 = \left(\frac{L1-L2}{\cos\propto}\right) - \left(\frac{B}{2} \times tg\propto\right)$$

Example:

A = 650, B = 500, C = 450

L1 = 1250 mm

$$L2 = \frac{1250}{2} - \left(\frac{650 + 450}{4 \times tg\ 29{,}7}\right) = 625 - 476{,}31$$

L2 = 142,87 ~ 143 mm

$$L3 = \frac{1250 - 143}{\cos 29{,}7} - \left(\frac{500}{2} \times tg\ 29{,}7\right) = 1274{,}42 - 142{,}60$$

L3 = 1131,82 ~ 1132 mm

Dimensions

A mm	B mm	C mm	L1 mm	L2 mm	L3 mm	∝
	80		350			28,0
	100		350			28,8
	120		350			28,8
	125		400			29,0
	140		450			29,1
	150		450			29,2
	160		450			29,2
	180		550			29,3
	200		550			29,3
	225		600			29,4
	250		750			29,5
	275		750			29,6
	300		750			29,6
	315		850			29,6
	350		950			29,6
	400		1050			29,7
	450		1250			29,7
	500		1250			29,7
	550		1250			29,8
	600		1450			29,8
	630		1650			29,8
	650		1650			29,8
	700		1650			29,8
	750		1850			29,9
	800		1850			29,9
	850		2050			29,9
	900		2050			29,9
Select (100 - 1000)		Select (100 - 1000)		Calculate	Calculate	

45° conical branch pieces, galvanised

Diameter A: ø100 - ø1000 mm.

Galvanised branch pieces are made of 0.90 mm sheet metal.

L1 will be extended by 2 x 50 mm if the branch piece is supplied with loose flanges [f.b.m.fl], rapid lock pull rings [f.lyn] or wide pull rings [f.bb].

State branch piece A-, B- and C dimensions when ordering. A, B and C can be combined to order; although branch B determines length L1 as stated in the table.

Maximum diameter reduction between A and C is 200 mm. For B applies: B < (A+C)/2.

The largest branch will determine L1 for double branch pieces.

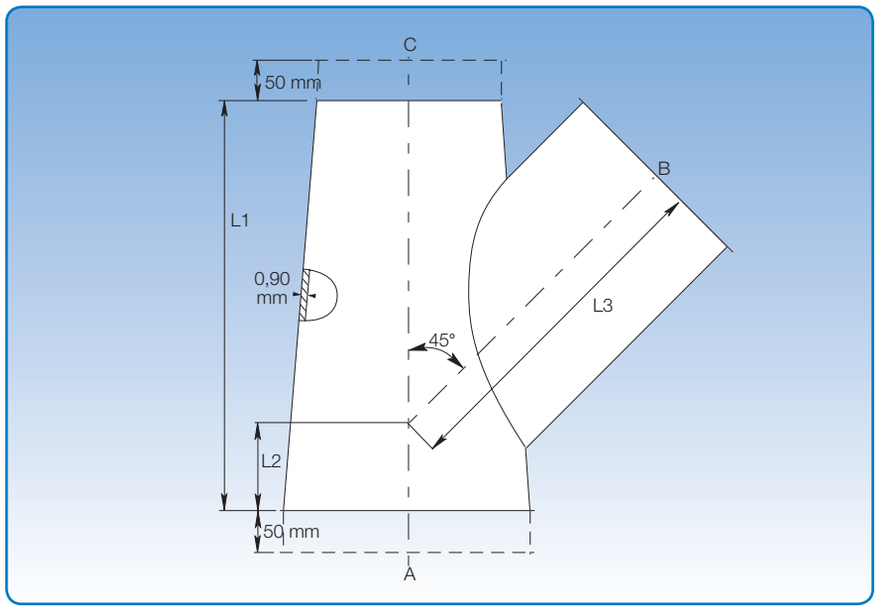

Calculating L2 and L3:

L1 = See table

$$L2 = \left(\frac{L1}{2}\right) - \left(\frac{A + C}{4\ tg\propto}\right)$$

$$L3 = \left(\frac{L1-L2}{\cos\propto}\right) - \left(\frac{B}{2} \times tg\propto\right)$$

Example:

A = 500, B = 300, C = 350

L1 = 600 mm

$$L2 = \frac{600}{2} - \left(\frac{500 + 350}{4 \times tg\ 44{,}6}\right) = 300 - 215{,}49$$

L2 = 84,51 ~ 85 mm

$$L3 = \frac{600 - 85}{\cos 44{,}6} - \left(\frac{300}{2} \times tg\ 44{,}6\right) = 723{,}29 - 149{,}92$$

L3 = 575,37 ~ 575 mm

Dimensions						
A mm	B mm	C mm	L1 mm	L2 mm	L3 mm	∝
	80		300			43,8
	100		300			43,8
	120		350			44,0
	125		350			44,0
	140		350			44,1
	150		400			44,2
	160		400			44,2
	180		400			44,3
	200		450			44,4
	225		500			44,5
	250		500			44,5
	275		600			44,6
	300		600			44,6
	315		600			44,6
	350		700			44,7
	400		800			44,7
	450		950			44,7
	500		1050			44,8
	550		1150			44,8
	600		1150			44,8
	630		1150			44,8
	650		1150			44,8
	700		1300			44,8
	750		1300			44,8
	800		1450			44,9
	850		1450			44,9
	900		1650			44,9
Select (100 - 1000)		Select (100 - 1000)		Calculate	Calculate	

30° branch plates, galvanised

Diameter: ø80 – ø1000 mm.

Galvanised branch plates are made of 0.90 mm sheet metal.

State A-, B- and C dimensions when ordering.
Options are limited by A = C, and A ≥ B.
A = C must be max. 1000 mm.

The branch determines the length of L1.
Branch plates are always straight with the branch centrally located.

If B < 300: X = 50 mm
If B > 300: X = 100 mm

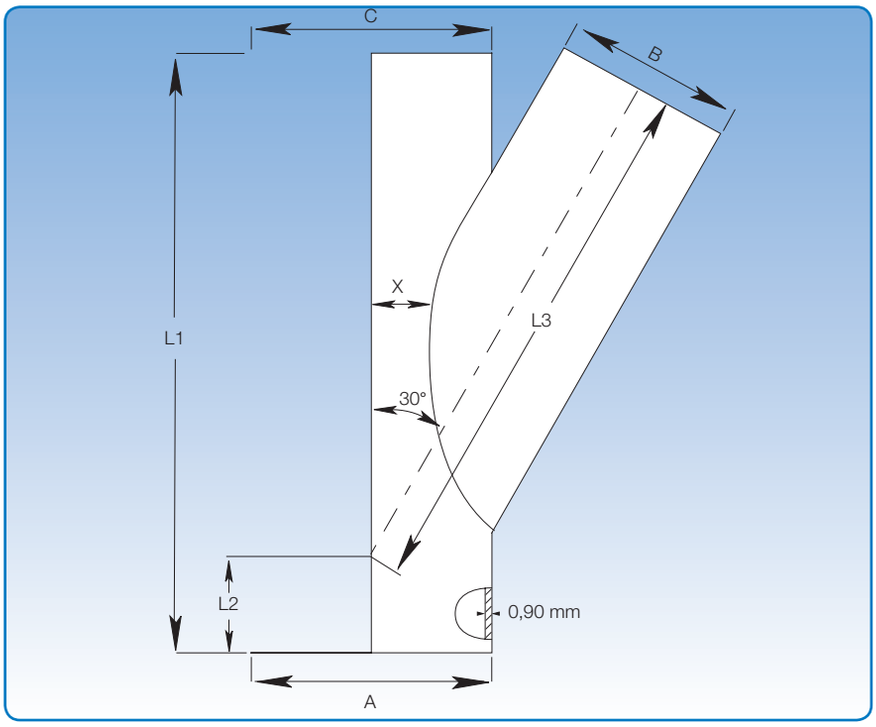

Calculating L2 and L3:

L1 = see table

$$L2 = \frac{1}{2} \times \left(L1 - \frac{A}{tg\propto}\right)$$

$$L3 = \frac{L1-L2}{\cos\propto} - \left(\frac{B}{2} \times tg\propto\right)$$

Example:

A = 700, B = 350, C = 700

L1 = 950 mm

$$L2 = 0{,}5 \times \left(950 - \frac{700}{tg\ 29{,}6}\right) = 0{,}5 \times (950 - 1232{,}22)$$

L2 = - 141,11 ~ - 141 mm

$$L3 = \frac{950 + 141}{\cos 29{,}6} - \left(\frac{350}{2} \times tg\ 29{,}6\right) = 1254{,}75 - 99{,}41$$

L3 = 1155,34 ~ 1155 mm

Dimensions

A = C mm	B mm	L1 mm	L2 mm	L3 mm	∝
Select (80 - 1000)	80	350	Calculate	Calculate	28,0
	100	350			28,8
	120	350			28,8
	125	400			29,0
	140	450			29,1
	150	450			29,2
	160	450			29,2
	180	550			29,3
	200	550			29,3
	225	600			29,4
	250	750			29,5
	275	750			29,6
	300	750			29,6
	315	850			29,6
	350	950			29,6
	400	1050			29,7
	450	1250			29,7
	500	1250			29,7
	550	1450			29,8
	600	1450			29,8
	650	1650			29,8
	700	1650			29,8
	750	1850			29,8
	800	1850			29,9
	850	2050			29,9
	900	2050			29,9

45° branch plates, galvanised

Diameter: ø80 – ø1000 mm.

Galvanised branch plates are made of 0.90 mm sheet metal.

State A-, B- and C dimensions when ordering. Options are limited by A = C, and A ≥ B. A = C must be max. 1000 mm.

The branch determines the length of L1. Branch plates are always straight with the branch centrally located.

If B < 300: X = 50 mm
If B > 300: X = 100 mm

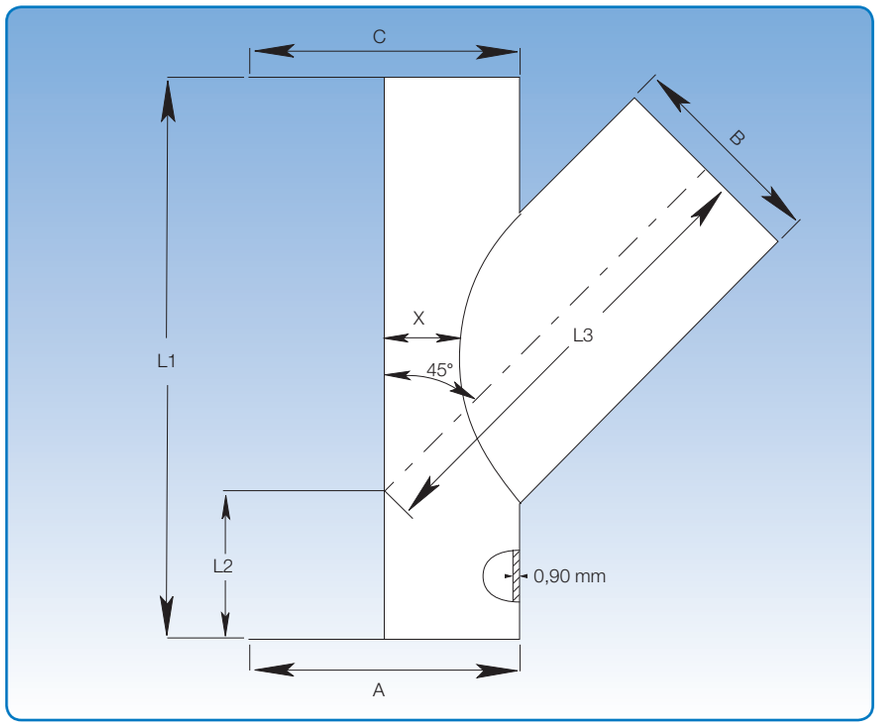

Calculating L2 and L3:

L1 = see table

$$L2 = \frac{1}{2} \times \left(L1 - \frac{A}{tg\propto}\right)$$

$$L3 = \frac{L1-L2}{\cos\propto} - \left(\frac{B}{2} \times tg\propto\right)$$

Example:

A = 550, B = 500, C = 550

L1 = 1050 mm

$$L2 = 0{,}5 \times \left(1050 - \frac{550}{tg\ 44{,}8}\right) = 0{,}5 \times (1050 - 550)$$

L2 = 248,07 ~ 248 mm

$$L3 = \frac{1050 - 248}{\cos 44{,}8} - \left(\frac{500}{2} \times tg\ 44{,}8\right) = 1130{,}26 - 248{,}26$$

L3 = 882 mm

Dimensions

A = C mm	B mm	L1 mm	L2 mm	L3 mm	∝
Select (80 - 1000)	80	300	Calculate	Calculate	43,8
	100	300			43,8
	120	350			44,0
	125	350			44,0
	140	350			44,1
	150	400			44,2
	160	400			44,2
	180	400			44,3
	200	450			44,4
	225	500			44,5
	250	500			44,5
	275	600			44,6
	300	600			44,6
	315	600			44,6
	350	700			44,7
	400	800			44,7
	450	950			44,7
	500	1050			44,8
	550	1150			44,8
	600	1150			44,8
	650	1150			44,8
	700	1300			44,8
	750	1300			44,8
	800	1450			44,8
	850	1450			44,9
	900	1650			44,9

30° and 45° trouser pieces, galvanised

Diameter: ø80 – ø1000 mm.

Galvanised trouser pieces are made of 0.90 mm sheet metal.

State A-, B- and C dimensions when ordering.

Trouser pieces are extended by 50 mm on legs B and C when assembled by wide pull rings [f.bb], rapid lock pull rings [f.lyn], or loose flanges [f.b.m.fl].

JKF can also supply trouser pieces in other angles and qualities.

For galvanised trouser pieces:
A ≥ B and A ≥ C. When C ≠ B, the highest value of B and C shall be used for calculation.

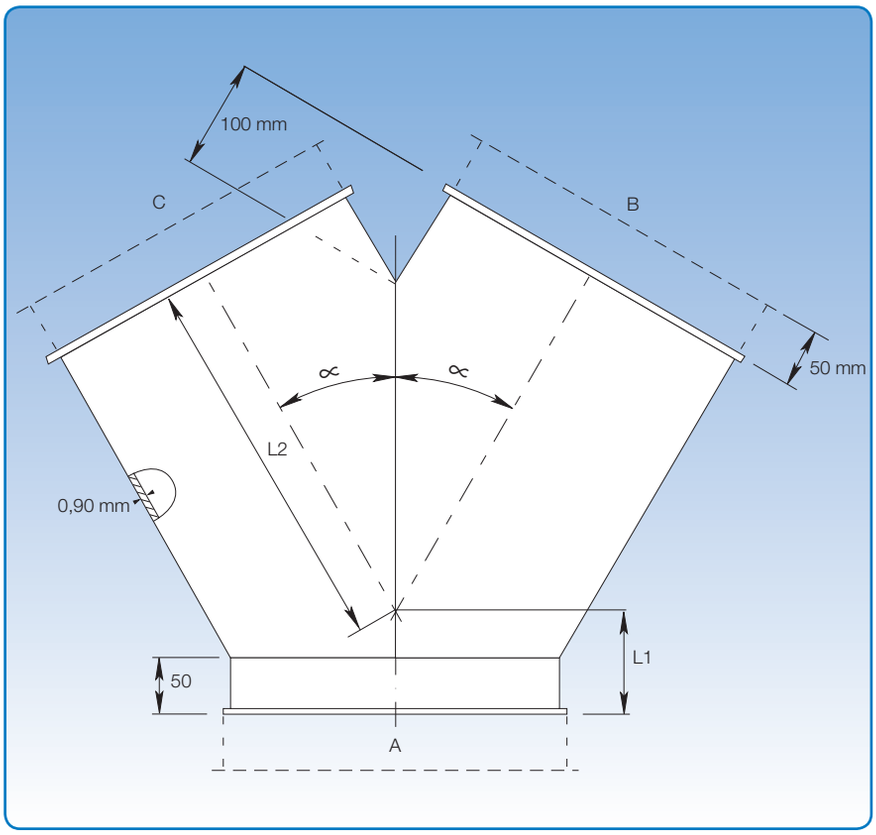

∝ = 30° or 45°

Calculation of L1 and L2 for 2 × 30°:

L1 = (A × 0,134) + 50

L2 = (B × 0,866) + 100

Example:

A = B = C = 200
L1 = (200 × 0,134) + 50 = 76,8
L2 = (200 × 0,866) + 100 = 273,2

Calculation of L1 and L2 for 2 × 45°:

L1 = (A × 0,207) + 50

L2 = (B × 0,5) + 100

Example:

A = B = C = 200
L1 = (200 × 0,207) + 50 = 91,4
L2 = (200 × 0,5) + 100 = 200

90° T-pieces, galvanised

Diameter: ø80 – ø1000 mm.

Galvanised T-pieces are made of 0.90 - 1.00 mm sheet metal (s).
Dimensions: A=C ≥ B.
State A-, B- and C dimensions when ordering.

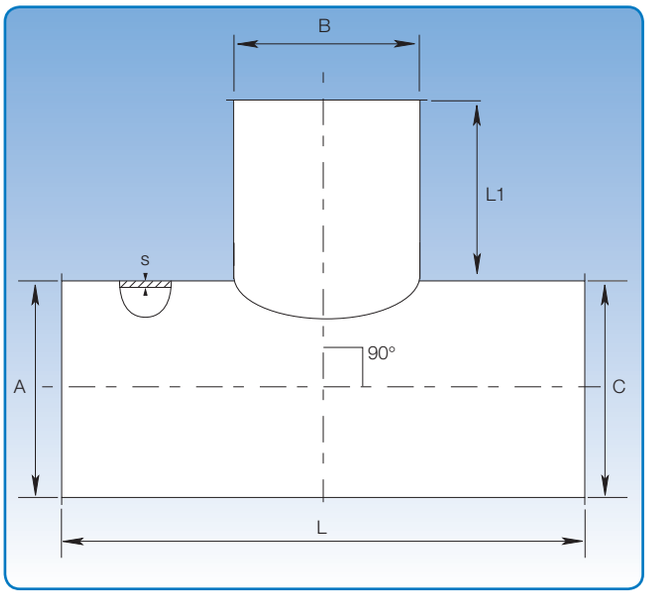

Dimensional specifications are given in the table below.

Dimensions			
B mm	**s mm**	**L mm**	**L1 mm**
80	0,90	230	75
100	0,90	250	75
120	0,90	270	75
125	0,90	275	75
140	0,90	290	75
150	0,90	300	75
160	0,90	310	75
180	0,90	330	75
200	0,90	350	75
225	0,90	425	100
250	0,90	450	100
275	0,90	475	100
300	0,90	500	100
315	0,90	515	100
350	0,90	550	100
400	0,90	600	100
450	0,90	750	150
500	0,90	800	150
550	0,90	850	150
600	0,90	900	150
630	0,90	930	150
650	0,90	950	150
700	0,90	1100	200
750	0,90	1150	200
800	1,00	1200	200
850	1,00	1250	200
900	1,00	1300	200
950	1,00	1350	200
1000	1,00	1400	200

Tapers, galvanised

Diameter: ø80 – ø1000 mm.

Tapers are spot welded and made of 0.90 mm galvanised sheet metal.

When assembling with wide pull rings [f.bb], rapid lock pull rings [f.lyn] and loose flanges [f.b.m.fl] length (L) is increased by 2 x 50 mm.

State D- and d dimensions when ordering. Length L is stated in the table below.

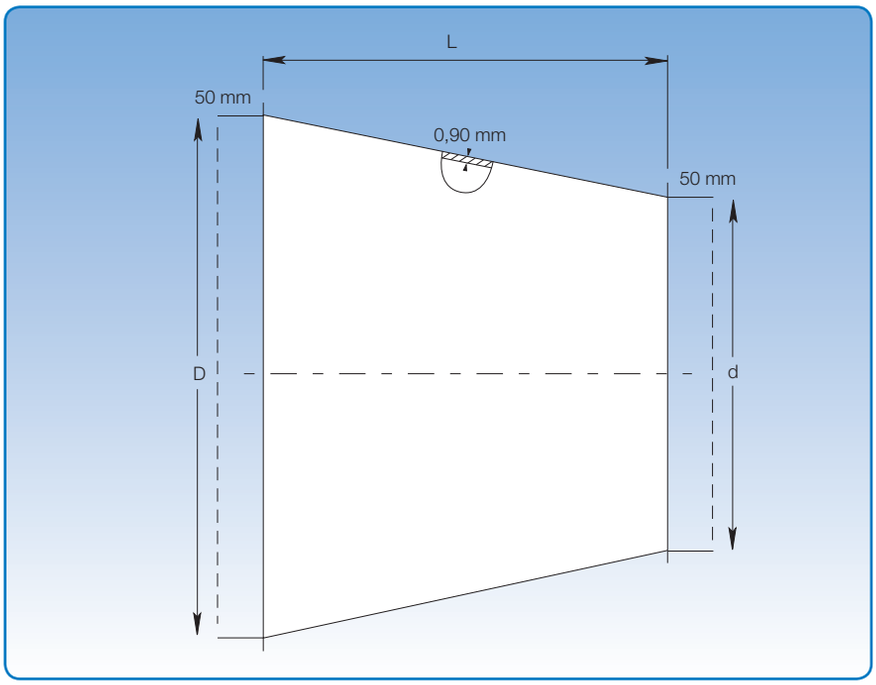

Determining taper length L:

The difference between the larger and smaller diameter (D - d) is plotted on the vertical axis of the coordinate system. By following the line from this point to the intersection, the length (L) can be read at the corresponding point on the horizontal axis.

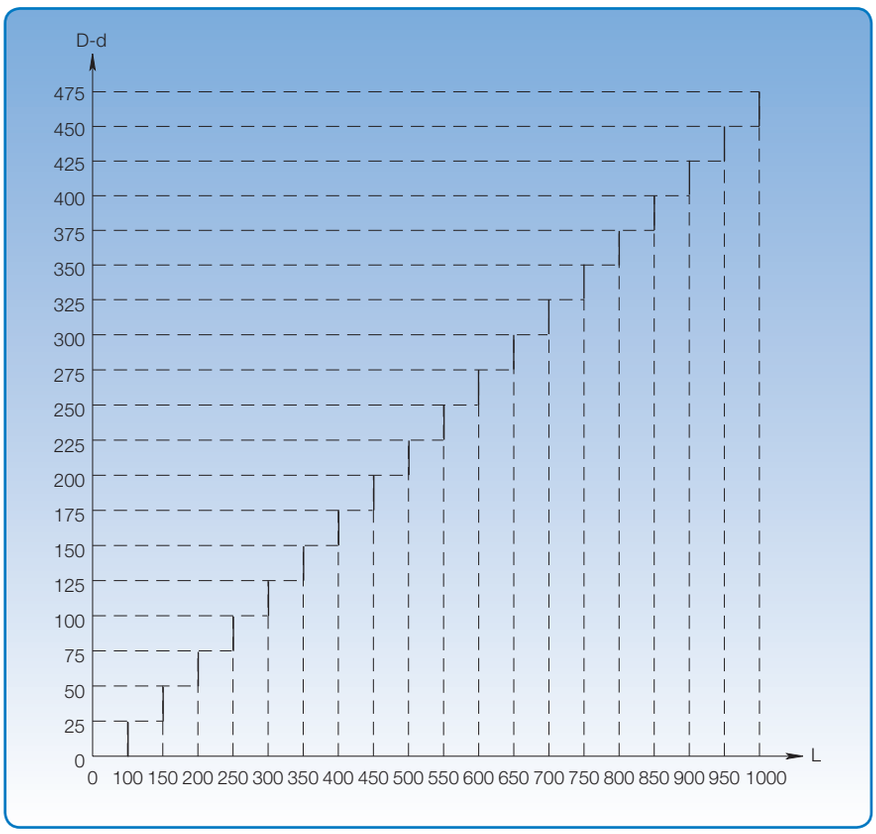

Transition pieces, galvanised

Diameter: ø80 – ø1000 mm.

Transition pieces are spot welded and made of 0.90 mm galvanised sheet metal.

Transition pieces can be made to order in other dimensions, and can be made asymmetrical.

State dimensions for BU · LU and D plus assembly method when ordering (p. 6).

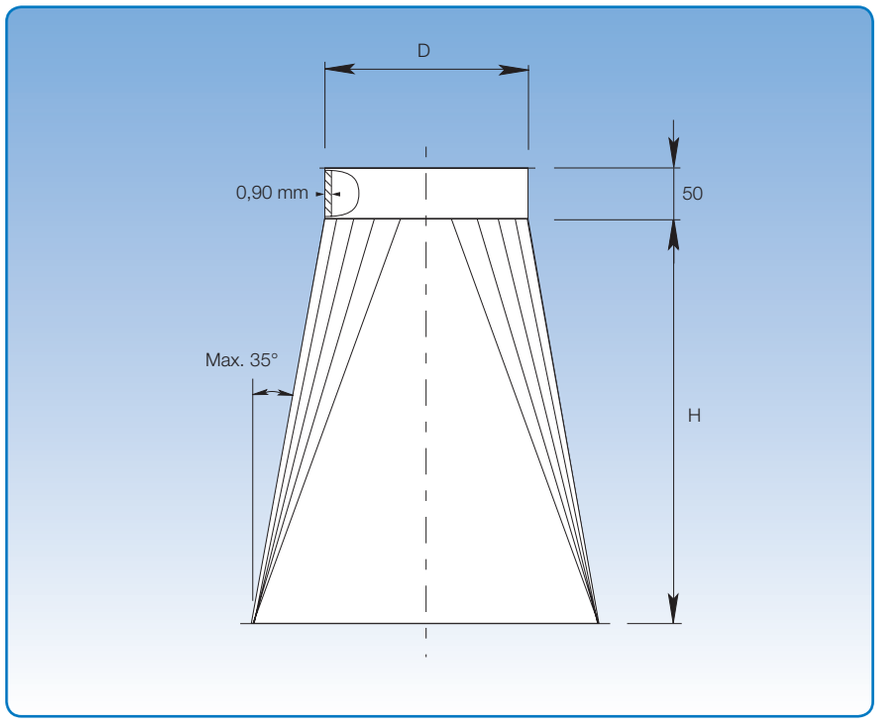

Calculating H:

H = 240 + 0,5 × (max. value of LU – D)
or (BU – D)

Example

D = 350, LU = 400, BU = 600, EXL = 200, EXB = 300

H = 240 + (0,5 × 250) = 240 + 125

H = 365 mm

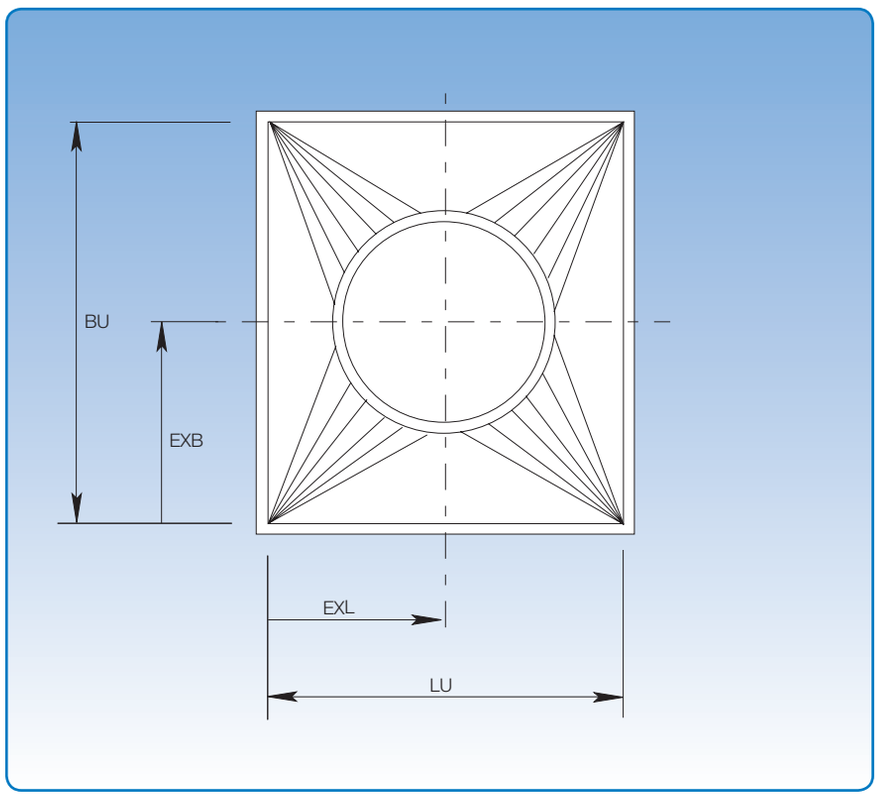

Ducts, 2 and 3 mm

Diameter for 2 mm: ø80 - ø1250 mm.

2 and 3 mm ducts D ≤ 600 mm supplied as standard for pull rings [f.b]. Ducts with D = ø630 mm - ø1250 mm supplied with flanges [m.fl].

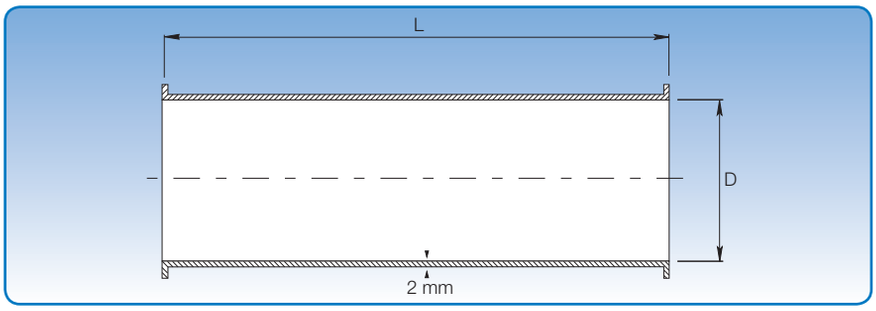

Dimensional specifications are given in the table below.

Dimensions

	L = 0.2 m		L = 0.5 m		L = 1.0 m		L = 2.0 m	
D mm	Item no.	kg	Item no.	kg	Item no.	kg	Item no.	kg
80	1040121	0,80	1040131	2,00	1040141	4,00	1040151	8,00
100	1041291	1,10	1041131	2,50	1041141	5,00	1041151	10,00
120	1042291	1,30	1042131	3,10	1042141	6,20	1042151	12,40
125	1043291	1,40	1043131	3,20	1043141	6,40	1043151	12,80
140	1044291	1,50	1044131	3,50	1044141	7,00	1044151	14,20
150	1045291	1,60	1045131	3,80	1045141	7,60	1045151	15,20
160	1046291	1,70	1046131	4,10	1046141	8,20	1046151	16,40
180	1047291	1,80	1047131	4,60	1047141	9,10	1047151	18,20
200	1048291	2,10	1048131	5,10	1048141	10,20	1048151	20,40
225	1049291	2,40	1049131	5,80	1049141	11,30	1049151	22,70
250	1050291	2,70	1050131	6,30	1050141	12,60	1050151	25,20
300	1051291	3,20	1051131	7,60	1051141	15,20	1051151	30,40
315	1052291	3,30	1052131	7,70	1052141	15,50	1052151	31,00
350	1053291	3,80	1053131	8,90	1053141	16,80	1053151	33,80
400	1054291	4,30	1054131	10,10	1054141	20,20	1054151	40,40
450	1055291	4,90	1055131	11,40	1055141	22,80	1055151	45,60
500	1056291	5,40	1056131	12,60	1056141	25,20	1056151	50,40
550	1057291	6,00	1057131	13,90	1057141	27,80	1057151	55,60
600	1058291	6,60	1058131	15,20	1058141	30,40	1058151	60,80
630	1059295	12,80	1059135	22,30	1059145	38,20	1059155	70,00
650	1060295	13,20	1060135	23,00	1060145	39,40	1060155	72,00
700	1061295	14,20	1061135	24,70	1061145	42,30	1061155	77,50
750	1062295	17,80	1062135	29,00	1062145	48,00	1062155	85,80
800	1063295	18,90	1063135	31,00	1063145	52,20	1063155	91,70
850	1064295	20,00	1064135	32,90	1064145	54,40	1064155	97,00
900	1065295	21,20	1065135	34,80	1065145	57,40	1065155	102,70
950	1066295	22,40	1066135	36,80	1066145	60,80	1066155	108,80
1000	1067295	23,50	1067135	38,60	1067145	63,80	1067155	114,20
1100	-	-	1068135	42,50	1068145	71,10	1068155	126,50
1250	-	-	1069135	45,20	1069145	76,70	1069155	129,70

Item numbers designated with D ≤ 600 mm are for ducts assembled with pull rings [f.b].

Item numbers designated with D ≥ 630 mm are for ducts with flanges [m.fl].

2 and 3 mm ducts are also available for other assembly methods. See p. 7 for assembly methods.

Ducts, 2 and 3 mm

Diameter for 3 mm: ø150 - ø1250 mm.

2 and 3 mm ducts D ≤ 600 mm supplied as standard for pull rings [f.b]. Ducts with D = ø630 mm - ø1250 mm supplied with flanges [m.fl].

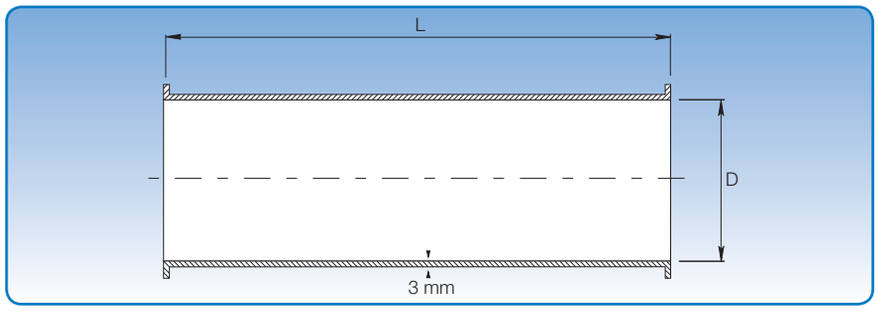

Dimensional specifications are given in the table below.

Dimensions

D mm	L = 0.2 m Item no.	L = 0.2 m kg	L = 0.5 m Item no.	L = 0.5 m kg	L = 1.0 m Item no.	L = 1.0 m kg	L = 2.0 m Item no.	L = 2.0 m kg
150	1045391	2,40	1045161	5,70	1045171	11,40	1045181	22,80
160	1046391	2,50	1046161	6,10	1046171	12,20	1046181	24,40
180	1047391	2,70	1047161	6,80	1047171	13,60	1047181	27,20
200	1048391	3,20	1048161	7,60	1048171	15,20	1048181	30,40
225	1049391	3,60	1049161	8,60	1049171	17,10	1049181	34,20
250	1050391	4,00	1050161	9,60	1050171	19,00	1050181	38,00
300	1051391	4,80	1051161	11,40	1051171	22,80	1051181	45,60
315	1052391	5,00	1052161	11,70	1052171	23,30	1052181	46,60
350	1053391	5,70	1053161	13,30	1053171	26,60	1053181	53,20
400	1054391	6,50	1054161	15,20	1054171	30,40	1054181	60,80
450	1055391	7,30	1055161	17,10	1055171	34,20	1055181	68,40
500	1056391	8,10	1056161	19,00	1056171	38,00	1056181	76,00
550	1057391	8,40	1057161	20,90	1057171	41,80	1057181	83,60
600	1058391	9,70	1058161	22,70	1058171	45,40	1058181	90,80
630	1059395	15,90	1059165	35,20	1059175	54,00	1059185	101,60
650	1060395	16,30	1060165	31,20	1060175	55,80	1060185	105,00
700	1061395	17,70	1061165	33,50	1061175	59,90	1061185	112,70
750	1062395	21,50	1062165	36,00	1062175	66,80	1062185	123,40
800	1063395	23,00	1063165	41,00	1063175	71,20	1063185	131,60
850	1064395	24,40	1064165	43,50	1064175	76,70	1064185	139,90
900	1065395	25,70	1065165	46,10	1065175	80,00	1065185	148,10
950	1066395	27,20	1066165	48,70	1066175	84,60	1066185	156,40
1000	1067395	28,50	1067165	52,20	1067175	89,00	1067185	168,60
1100	-	-	1068165	56,30	1068175	98,00	1068185	181,00
1250	-	-	1069165	61,00	1069175	108,20	1069185	202,70

Item numbers designated with D ≤ 600 mm are for ducts assembled with pull rings [f.b].

Item numbers designated with D ≥ 630 mm are for ducts with flanges [m.fl].

2 and 3 mm ducts are also available for other assembly methods. See p. 7 for assembly methods.

Telescopic ducts, 2 mm

Diameter: ø100 - ø600 mm.

Welded telescopic ducts are made of 2.00 mm sheet metal (s), and supplied with rapid lock pull rings with rubber gasket.

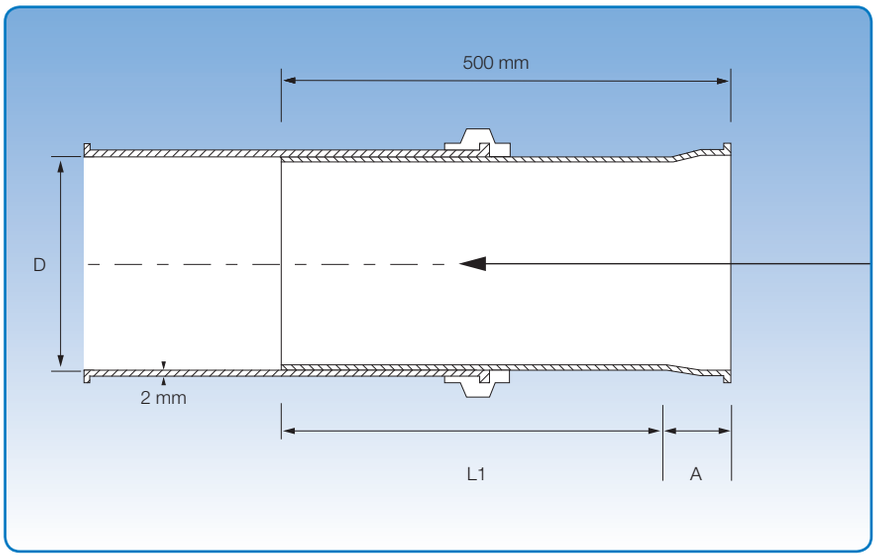

Dimensional specifications are given in the table below.

Dimensions				
Item no.	A mm	L1 mm	D mm	Weight kg
1069191	55	445	100	2,70
1069201	55	445	120	3,10
1069211	55	445	125	3,40
1069221	65	435	140	3,70
1069231	65	435	150	3,90
1069241	65	435	160	4,20
1069251	65	435	180	4,90
1069261	65	435	200	5,20
1069271	65	435	225	5,80
1069281	65	435	250	6,50
1069291	65	435	275	6,70
1069301	65	435	300	7,80
1069311	65	435	315	8,10
1069321	65	435	350	9,00
1069331	65	435	400	10,10
1069341	65	435	450	11,70
1069351	70	435	500	12,30
1069361	70	456	550	14,60
1069371	70	435	600	15,90

The item numbers stated are for primed telescopic ducts assembled using pull rings [f.b].

Telescopic ducts are also available for other assembly methods. See p. 7 for assembly methods.

Ducts with direct flange, 2 and 3 mm

Diameter: ø300 - ø1000 mm.

Ducts with direct flanges are welded and made of 2.00 and 3.00 mm sheet metal (s).

Ducts are supplied with direct flanges [d.fl] in same material as ducts.

Direct flanges can be fitted along with JKF's standard range of loose and welded flanges.
Item numbers stated are for primed ducts.

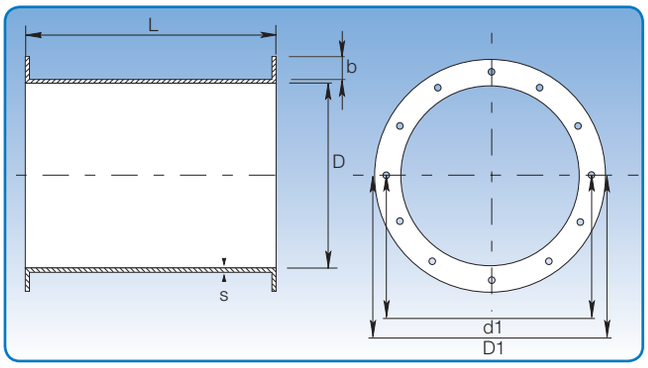

Dimensional specifications are given in the table below.

Dimensions

D mm	s mm	D1 mm	d1 mm	Weight at L = 0.2 m Item no.	Weight at L = 0.2 m kg	Weight at L = 0.5 m Item no.	Weight at L = 0.5 m kg	Weight at L = 1.0 m Item no.	Weight at L = 1.0 m kg	Weight at L = 2.0 m Item no.	Weight at L = 2.0 m kg	Quant. holes
300	2,00	354	336	1051299	3,20	1051139	7,60	1051149	15,20	1051159	30,40	12
315	2,00	370	351	1052299	3,30	1052139	7,90	1052149	15,80	1052159	31,60	12
350	2,00	415	389	1053299	3,80	1053139	8,90	1053149	17,80	1053159	35,60	12
400	2,00	465	439	1054299	4,30	1054139	10,10	1054149	20,20	1054159	40,40	16
450	2,00	515	489	1055299	4,90	1055139	11,40	1055149	22,80	1055159	45,60	16
500	2,00	565	540	1056299	5,40	1056139	12,60	1056149	25,20	1056159	50,40	16
550	2,00	615	590	1057299	6,00	1057139	13,90	1057149	27,80	1057159	55,60	16
600	2,00	665	640	1058299	6,60	1058139	15,20	1058149	30,40	1058159	60,80	16
630	2,00	695	670	1059299	6,40	1059139	15,90	1059149	31,80	1059159	63,60	24
650	2,00	715	690	1060299	6,60	1060139	16,40	1060149	32,80	1060159	65,60	24
700	2,00	785	750	1061299	7,10	1061139	17,60	1061149	35,20	1061159	70,40	24
750	2,00	835	800	1062299	7,60	1062139	18,90	1062149	37,80	1062159	75,60	24
800	2,00	885	850	1063299	8,10	1063139	20,20	1063149	40,40	1063159	80,80	24
850	2,00	935	900	1064299	8,60	1064139	21,40	1064149	42,80	1064159	85,60	24
900	2,00	985	950	1065299	9,10	1065139	22,70	1065149	45,30	1065159	90,60	24
950	2,00	1035	1000	1066299	9,60	1066139	24,00	1066149	48,00	1066159	96,00	24
1000	2,00	1085	1050	1067299	10,10	1067139	25,20	1067149	50,40	1067159	100,80	24
300	3,00	354	336	1051399	4,80	1051169	11,40	1051179	22,80	1051189	45,60	12
315	3,00	370	351	1052399	5,00	1052169	11,90	1052179	23,70	1052189	47,40	12
350	3,00	415	389	1053399	5,70	1053169	13,30	1053179	26,60	1053189	53,20	12
400	3,00	465	439	1054399	6,50	1054169	15,20	1054179	30,40	1054189	60,80	16
450	3,00	515	489	1055399	7,30	1055169	17,10	1055179	34,20	1055189	68,40	16
500	3,00	565	540	1056399	8,10	1056169	19,00	1056179	38,00	1056189	76,00	16
550	3,00	615	590	1057399	8,40	1057169	20,90	1057179	41,80	1057189	83,60	16
600	3,00	665	640	1058399	9,70	1058169	22,70	1058179	45,40	1058189	90,80	16
630	3,00	695	670	1059399	9,50	1059169	23,80	1059179	47,60	1059189	95,20	24
650	3,00	715	690	1060399	9,70	1060169	24,60	1060179	49,20	1060189	98,40	24
700	3,00	785	750	1061399	10,60	1061169	26,40	1061179	52,80	1061189	105,60	24
750	3,00	835	800	1062399	11,30	1062169	28,30	1062179	56,60	1062189	113,20	24
800	3,00	885	850	1063399	12,10	1063169	30,20	1063179	60,40	1063189	120,80	24
850	3,00	935	900	1064399	12,90	1064169	32,10	1064179	64,20	1064189	128,40	24
900	3,00	985	950	1065399	13,60	1065169	34,00	1065179	68,00	1065189	136,00	24
950	3,00	1035	1000	1066399	14,40	1066169	35,90	1066179	71,80	1066189	143,60	24
1000	3,00	1085	1050	1067399	15,10	1067169	37,80	1067179	75,60	1067189	151,20	24

Duct length/flange width/hole size

D mm	b mm	L = 0.2 m mm	L = 0.5 m mm	L = 1.0 m mm	L = 2.0 mm	Hole size mm
300 - 315	25	200	455	955	1955	9
350 - 650	30	200	445	945	1945	11
700 - 1000	40	200	425	925	1925	11

Welding ends, 2 and 3 mm

Diameter: ø80 - ø600 mm.

Welding ends are made of 2.00 and 3.00 mm sheet metal (s) and supplied untreated.

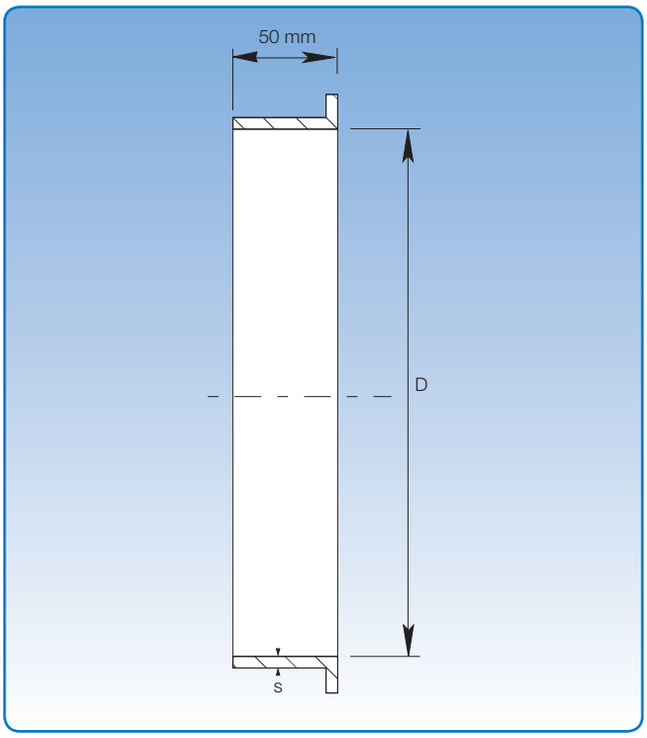

Dimensional specifications are given in the table below.

Dimensions

D mm	Item no.	s = 2 mm	Weight kg	Item no.	s = 3 mm	Weight kg
80	1010700		0,22			
100	1011700		0,27			
120	1012700		0,33			
125	1013700		0,34			
140	1014700		0,38			
150	1015700		0,41	1015800		0,62
160	1016700		0,44	1016800		0,66
180	1017700		0,49	1017800		0,74
200	1018700		0,55	1018800		0,82
225	1019700		0,61	1019800		0,92
250	1020700		0,68	1020800		1,02
275	1020710		0,75	1021810		1,12
300	1021700		0,82	1021800		1,23
315	1022700		0,86	1022800		1,29
350	1023700		0,95	1023800		1,43
400	1024700		1,09	1024800		1,63
450	1025700		1,27	1025800		1,89
500	1026700		1,36	1026800		2,04
550	1027700		1,50	1027800		2,24
600	1028700		1,63	1028800		2,45

The item numbers stated are for primed welding ends assembled using pull rings [f.b].

Welding ends are also available for other assembly methods. See p. 7 for assembly methods.

Pressed bends, 2 and 3 mm

Diameter for 2 mm: ø100 - ø400 mm.

Diameter for 3 mm: ø150 - ø200 mm.

Pressed bends are made of 2.00 and 3.00 mm sheet metal (s).

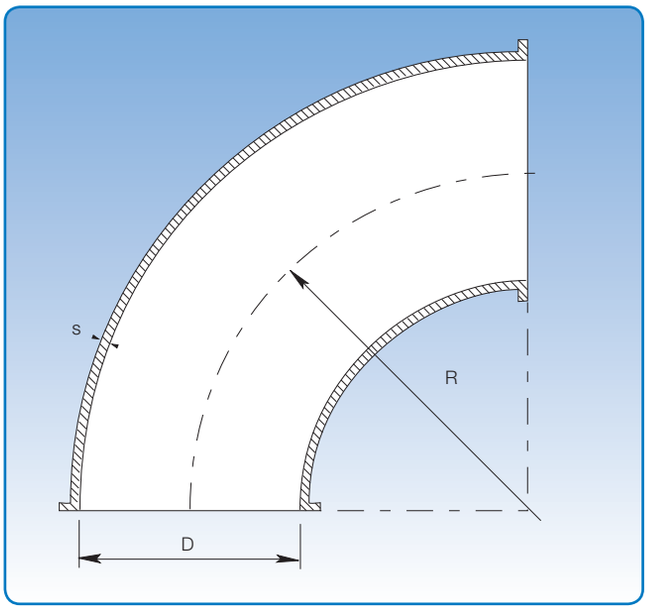

Dimensional specifications are given in the table below.
R = 1.5 x D for all dimensions.

Dimensions

D	s	90°		60°		45°		30°		15°	
mm	mm	Item no.	kg	Item no.	kg	Item no.	kg	Item no.	kg	Item no.	kg
100	2,00	1141292	1,20	1141262	0,90	1141242	0,60	1141232	0,40	1141212	0,20
120	2,00	1142292	1,80	1142262	1,20	1142242	0,90	1142232	0,60	1142212	0,30
125	2,00	1143292	2,00	1143262	1,30	1143242	1,00	1143232	0,70	1143212	0,40
150	2,00	1145292	2,90	1145262	2,00	1145242	1,40	1145232	1,00	1145212	0,50
160	2,00	1146292	3,20	1146262	2,20	1146242	1,60	1146232	1,10	1146212	0,70
180	2,00	1147292	3,80	1147262	2,70	1147242	1,90	1147232	1,40	1147212	0,70
200	2,00	1148292	5,00	1148262	3,40	1148242	2,50	1148232	1,70	1148212	0,70
250	2,00	1150292	8,90	1150262	5,90	1150242	4,40	1150232	2,90	1150212	1,40
300	2,00	1151292	12,90	1151262	7,60	1151242	6,40	1151232	4,30	1151212	1,90
350	2,00	1153292	17,80	1153262	12,00	1153242	9,30	1153232	5,20	1153212	3,20
400	2,00	1154292	23,50	1154262	15,70	1154242	11,80	1154232	7,50	1154212	4,10
150	3,00	1145392	4,30	1145362	3,00	1145342	2,20	1145332	1,50	1145312	0,80
160	3,00	1146392	4,80	1146362	3,20	1146342	2,40	1146332	1,60	1146312	1,00
180	3,00	1147392	6,20	1147362	4,10	1147342	3,10	1147332	2,10	1147312	1,10
200	3,00	1148392	7,50	1148362	5,10	1148342	3,70	1148332	2,50	1148312	1,30

The item numbers stated are for primed pressed bends assembled using pull rings [f.b].

Pressed bends are also available for other assembly methods. See p. 7 for assembly methods.

Segment bends, 2 and 3 mm

Diameter for 2 mm: ø140 - ø1000 mm.
Diameter for 3 mm: ø225 - ø1000 mm.

Segment bends are available in other radii and dimensions to order.
2 and 3 mm segment bends are supplied as standard for pull rings [f.b].
Segment bends with D = ø630 mm - ø1000 mm supplied with flange [m.fl].

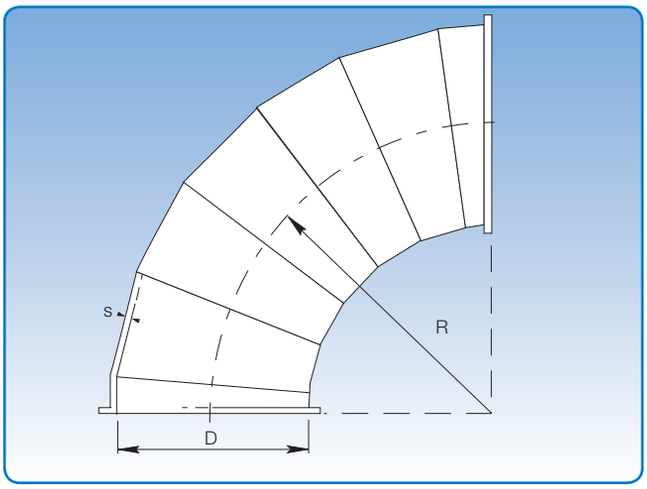

Dimensional specifications are given in the table below.
R = 1.5 x D for all dimensions.

Dimensions

D	s	90°		60°		45°		30°		15°	
mm	mm	Item no.	kg	Item no.	kg	Item no.	kg	Item no.	kg	Item no.	kg
140	2,00	1144292	2,90	1144262	2,00	1144242	1,40	1144232	1,00	1144212	0,50
225	2,00	1149292	7,60	1149262	5,20	1149242	3,80	1149232	2,60	1149212	1,40
275	2,00	11588929	9,60	11588629	7,20	11588429	4,80	1152232	3,60	11588129	1,80
315	2,00	1152292	13,30	1152262	8,60	1152242	6,50	11588329	4,40	1152212	2,20
450	2,00	1155892	24,20	1155862	16,20	1155842	12,10	1155832	8,10	1155812	4,00
500	2,00	1156892	29,90	1156862	20,00	1156842	15,00	1156832	10,00	1156812	5,00
550	2,00	1157892	36,20	1157862	24,20	1157842	18,10	1157832	12,10	1157812	6,00
600	2,00	1158892	43,10	1158862	28,80	1158842	21,60	1158832	14,40	1158812	7,20
630	2,00	1159895	53,78	1159865	38,08	1159845	30,18	1159835	22,18	1159815	14,28
650	2,00	1160895	57,17	1160865	40,37	1160845	31,87	1160835	23,47	1160815	14,97
700	2,00	1161895	65,85	1161865	46,25	1161845	36,45	1161835	26,65	1161815	16,85
750	2,00	1162895	77,67	1162865	55,17	1162845	43,97	1162835	32,67	1162815	21,20
800	2,00	1163895	87,61	1163865	62,01	1163845	49,21	1163835	36,41	1163815	23,61
850	2,00	1164895	98,25	1164865	69,25	1164845	54,85	1164835	40,35	1164815	25,95
900	2,00	1165895	109,40	1165865	77,00	1165845	60,80	1165835	44,50	1165815	28,30
950	2,00	1166895	121,14	1166865	85,04	1166845	66,94	1166835	48,84	1166815	30,84
1000	2,00	1167895	133,58	1167865	93,48	1167845	73,48	1167835	53,48	1167815	33,38
225	3,00	1149392	11,10	1149362	7,40	1149342	5,60	1149332	3,70	1149312	1,90
250	3,00	1150392	11,10	1150362	7,40	1150342	5,60	1150332	3,70	1150312	1,90
275	3,00	11589929	14,40	11589629	10,80	11589429	7,20	11589329	5,40	11589129	2,70
300	3,00	1151392	16,10	1151362	10,70	1151342	8,00	1151332	5,40	1151312	2,70
315	3,00	1152392	19,65	1152362	12,90	1152342	9,75	1152332	6,60	1152312	3,30
350	3,00	1153392	22,00	1153362	14,60	1153342	11,00	1153332	7,30	1153312	3,70
400	3,00	1154392	28,60	1154362	19,10	1154342	14,30	1154332	9,50	1154312	4,80
450	3,00	1155992	36,40	1155962	24,20	1155942	18,20	1155932	12,10	1155912	6,10
500	3,00	1156992	44,90	1156962	29,90	1156942	22,40	1156932	15,00	1156912	7,50
550	3,00	1157992	54,40	1157962	36,20	1157942	27,20	1157932	18,10	1157912	9,10
600	3,00	1158992	64,70	1158962	43,20	1158942	32,40	1158932	21,60	1158912	10,80
630	3,00	1159995	77,48	1159965	53,78	1159945	41,98	1159935	30,08	1159915	18,28
650	3.00	1160995	82,57	1160965	57,17	1160945	44,57	1160935	31,87	1160915	19,27
700	3,00	1161995	95,25	1161965	65,85	1161945	51,15	1161935	36,45	1161915	21,75
750	3,00	1162995	111,47	1162965	77,67	1162945	60,77	1162935	43,97	1162915	27,07
800	3,00	1163995	126,01	1163965	87,61	1163945	68,41	1163935	49,21	1163915	30,01
850	3,00	1164995	141,35	1164965	98,05	1164945	76,55	1164935	54,85	1164915	33,15
900	3,00	1165995	158,10	1165965	109,40	1165945	75,10	1165935	60,80	1165915	36,40
950	3,00	1166995	175,34	1166965	121,14	1166945	94,04	1166935	66,94	1166915	39,84
1000	3,00	1167995	193,68	1167965	133,58	1167945	103,58	1167935	73,48	1167915	43,48

Item numbers designated with D ≤ 600 mm are for segment bends assembled with pull rings [f.lyn]. Item numbers designated with D ≥ 630 mm are for ducts with flange [m.fl]. 2 and 3 mm ducts are also available for other assembly methods. See p. 7 for assembly methods.

30° straight branch pieces, 2 and 3 mm

Diameter for 2 mm: ø100 - ø1000 mm.
Diameter for 3 mm: ø150 - ø1000 mm.

Straight branch pieces are welded and made of 2.00 and 3.00 mm sheet metal (s). Straight branch pieces with A = C ≤ 600 mm are supplied for assembly with pull rings [f.b] and for A = C ≥ 630 mm with flanges [m.fl].
When assembled with loose flanges, [f.b.m.fl], and flanges [m.fl] L1 is extended by 2 x 50 mm.

State A-, B- and C dimensions when ordering. Options are limited by A = C, and A ≥ B.

The branch determines the length of L1. Branch pieces are always straight with the branch centrally located.

L1, L2 and L3 can be calculated using the stated formulas.

For double branch pieces, the highest value of dim. B determines L1 on the common branch. L2 and L3 can then be calculated for both branches. Normally, the branches are opposite each other.

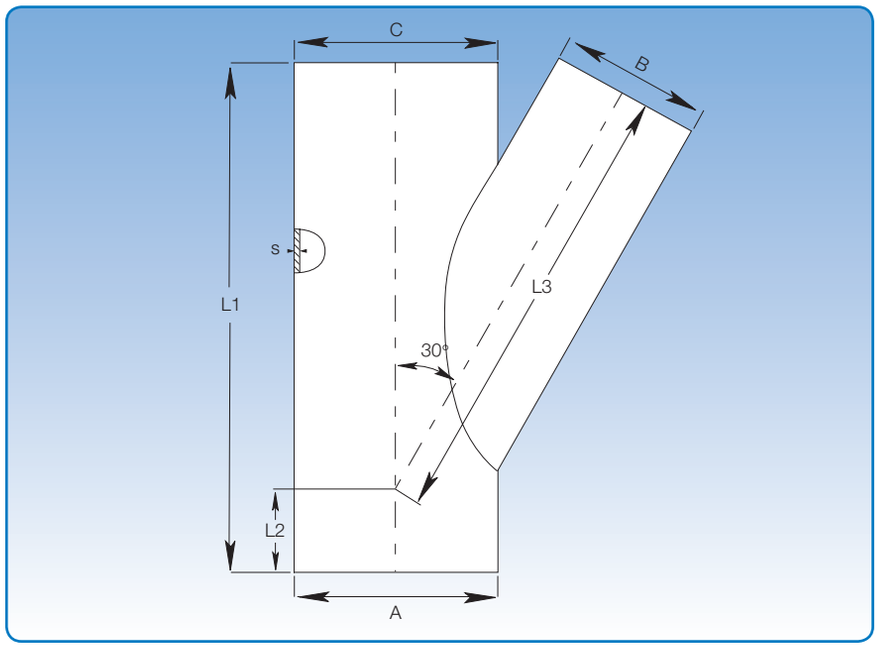

Calculating L2 and L3:

L1 = see table

$$L2 = \frac{L1}{2} - \left(\frac{A}{2 \times tg\ 30°}\right)$$

$$L3 = \frac{L1-L2}{\cos 30°} - \left(\frac{B}{2} \times tg\ 30°\right)$$

Example:

A = B = C = 450

L1 = 1250 mm

$$L2 = \frac{1250}{2} - \left(\frac{450}{tg\ 30°}\right) = 625 - 389{,}71$$

L2 = 235,29 ~ 235 mm

$$L3 = \frac{1250 - 235}{\cos 30°} - \left(\frac{450}{2} \times tg\ 30°\right) = 1172{,}06 - 129{,}92$$

L3 = 1042,14 ~ 1042 mm

Dimensions				
A = C mm	B mm	L1 mm	L2 mm	L3 mm
Select (100 - 1000)	80	350	Calculate	Calculate
	100	350		
	120	350		
	125	400		
	140	450		
	150	450		
	160	450		
	180	550		
	200	550		
	225	600		
	250	750		
	275	750		
	300	750		
	315	850		
	350	950		
	400	1050		
	450	1250		
	500	1250		
	550	1450		
	600	1450		
	650	1650		
	700	1650		
	750	1850		
	800	1850		
	850	2050		
	900	2050		

45° straight branch pieces, 2 and 3 mm

Diameter for 2 mm: ø100 - ø1000 mm.
Diameter for 3 mm: ø150 - ø1000 mm.

Straight branch pieces are welded and made of 2.00 and 3.00 mm sheet metal (s). Straight branch pieces with A = C ≤ 600 mm are supplied for assembly with pull rings [f.b] and for A = C ≥ 630 mm with flanges [m.fl]. When assembled with loose flanges, [f.b.m.fl], and flanges [m.fl] L1 is extended by 2 x 50 mm.

State A-, B- and C dimensions when ordering. Options are limited by A = C, and A ≥ B.

The branch determines the length of L1. Branch pieces are always straight with the branch centrally located. L1, L2 and L3 can be calculated using the stated formulas.

For double branch pieces, the highest value of dim. B determines L1 on the common branch. L2 and L3 can then be calculated for both branches. Normally, the branches are opposite each other.

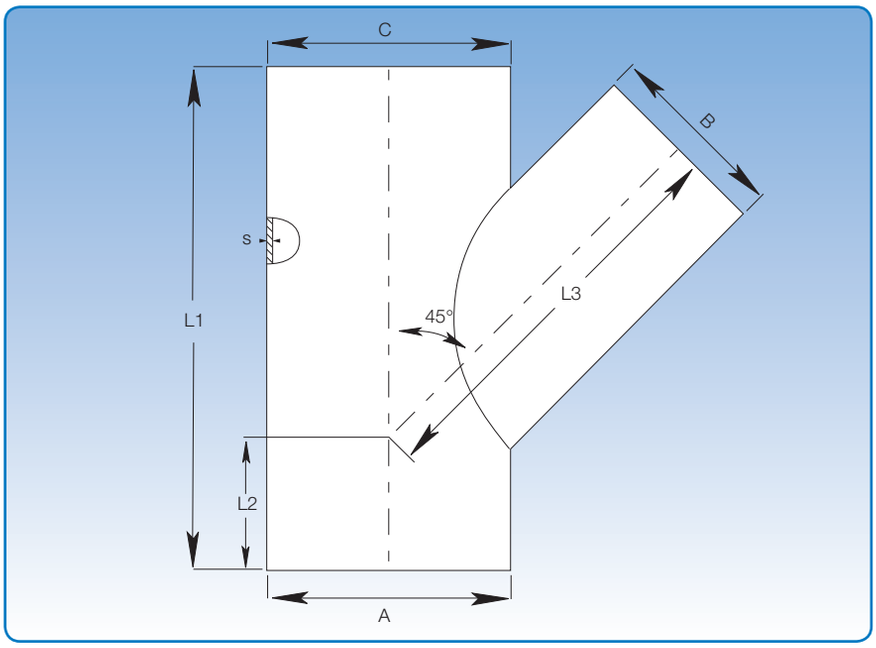

Calculating L2 and L3:

L1 = see table

$$L2 = \frac{L1}{2} - \left(\frac{A}{2 \times \text{tg } 45°}\right)$$

$$L3 = \frac{L1-L2}{\cos 45°} - \left(\frac{B}{2} \times \text{tg } 45°\right)$$

Example:

A = B = C = 600

L1 = 1150 mm

$$L2 = \frac{1150}{2} - \frac{600}{2} = 575 - 300$$

L2 = 275 mm

$$L3 = \frac{1150 - 275}{\cos 45°} - \left(\frac{600}{2} \times \text{tg } 45°\right)$$

L3 = 1237,44 - 300

L3 = 937,44 ~ 937 mm

Dimensions				
A = C mm	B mm	L1 mm	L2 mm	L3 mm
Select (100 - 1000)	80	300	Calculate	Calculate
	100	300		
	120	350		
	125	350		
	140	350		
	150	400		
	160	400		
	180	400		
	200	450		
	225	500		
	250	500		
	275	600		
	300	600		
	315	600		
	350	700		
	400	800		
	450	950		
	500	950		
	550	1050		
	600	1150		
	650	1150		
	700	1300		
	750	1300		
	800	1450		
	850	1450		
	900	1650		

30° conical branch pieces, 2 and 3 mm

Diameter A for 2 mm: ø120 - ø1000 mm.
Diameter A for 3 mm: ø150 - ø1000 mm.

Conical branch pieces are welded and made of 2.00 and 3.00 mm sheet metal (s). Conical branch pieces with A ≤ 600 mm are supplied for assembly with pull rings [f.b] and for A ≥ 630 mm with flanges [m.fl].

L1 is extended by a 50 mm welding end at dimension C if the branch piece is supplied with flanges [m.fl], loose flanges [f.b.m.fl] or rapid lock pull rings [f.lyn].

State branch piece A-, B- and C dimensions when ordering. A, B and C can be combined to order; although branch B determines length L1 as stated in the table.

Maximum difference between diameter A and C is 100 mm. For B applies:
B < (A+C)/2.

The highest value of dimension B determines L1 on the common stem for double branch pieces. L2 and L3 can then be calculated for both branches. Normally, the branches are opposite each other.

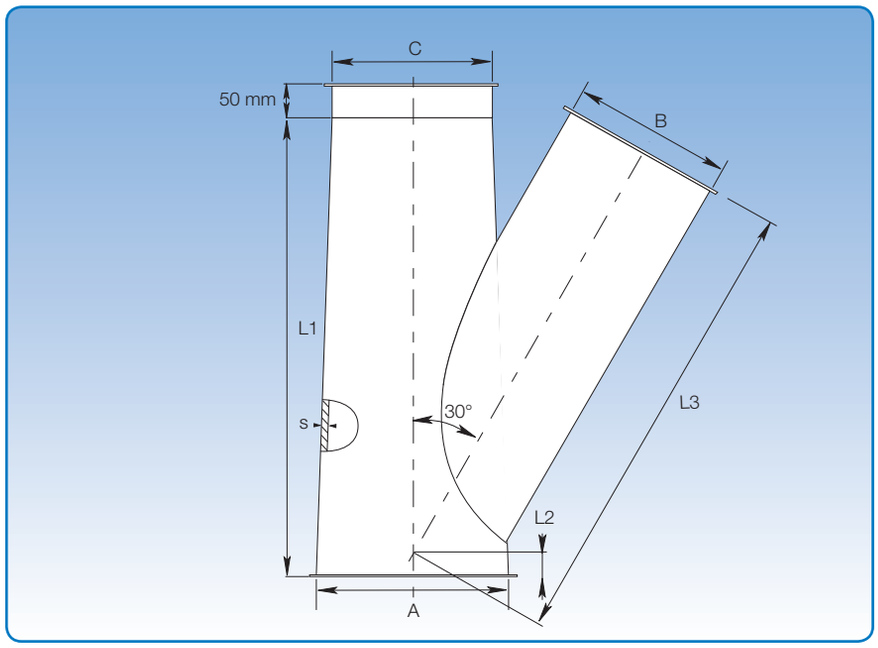

Calculating L2 and L3:

L1 = See table

$$L2 = \left(\frac{L1}{2}\right) - \left(\frac{A + C}{4 \times tg\ 30°}\right)$$

$$L3 = \left(\frac{L1-L2}{\cos 30°}\right) - \left(\frac{B}{2} \times tg\ 30°\right)$$

Example:

A = 500, B = 300, C = 400

L1 = 750 mm

$$L2 = \frac{750}{2} - \frac{500 + 400}{4 \times tg\ 30°} = 375 - 389{,}71$$

L2 = - 14,71 ~ - 15 mm

$$L3 = \frac{750 - 15}{\cos 30°} - \left(\frac{300}{2} \times tg\ 30°\right) = 848{,}70 - 86{,}61$$

L3 = 762,1 ~ 762 mm

Dimensions					
A mm	B mm	C mm	L1 mm	L2 mm	L3 mm
Select (100 - 1000)	80	Select (100 - 1000)	350	Calculate	Calculate
	100		350		
	120		350		
	125		400		
	140		450		
	150		450		
	160		450		
	180		550		
	200		550		
	225		600		
	250		750		
	275		750		
	300		750		
	315		850		
	350		950		
	400		1050		
	450		1250		
	500		1250		
	550		1250		
	600		1450		
	650		1650		
	700		1650		
	750		1850		
	800		1850		
	850		2050		
	900		2050		

45° conical branch pieces, 2 and 3 mm

Diameter A for 2 mm: ø120 - ø1000 mm.
Diameter A for 3 mm: ø150 - ø1000 mm.

Conical branch pieces are welded and made of 2.00 and 3.00 mm sheet metal (s). Conical branch pieces with A ≤ 600 mm are supplied for assembly with pull rings [f.b] and for A ≥ 630 mm with flanges [m.fl].

L1 is extended by a 50 mm welding end at dimension C if the branch piece is supplied with flanges [m.fl], loose flanges [f.b.m.fl] or rapid lock pull rings [f.lyn].

State branch piece A-, B- and C dimensions when ordering. A, B and C can be combined to order; although branch B determines length L1 as stated in the table.

Maximum difference between diameter A and C is 100 mm. For B applies:
B < (A+C)/2.

The highest value of dimension B determines L1 on the common stem for double branch pieces. L2 and L3 can then be calculated for both branches. Normally, the branches are opposite each other.

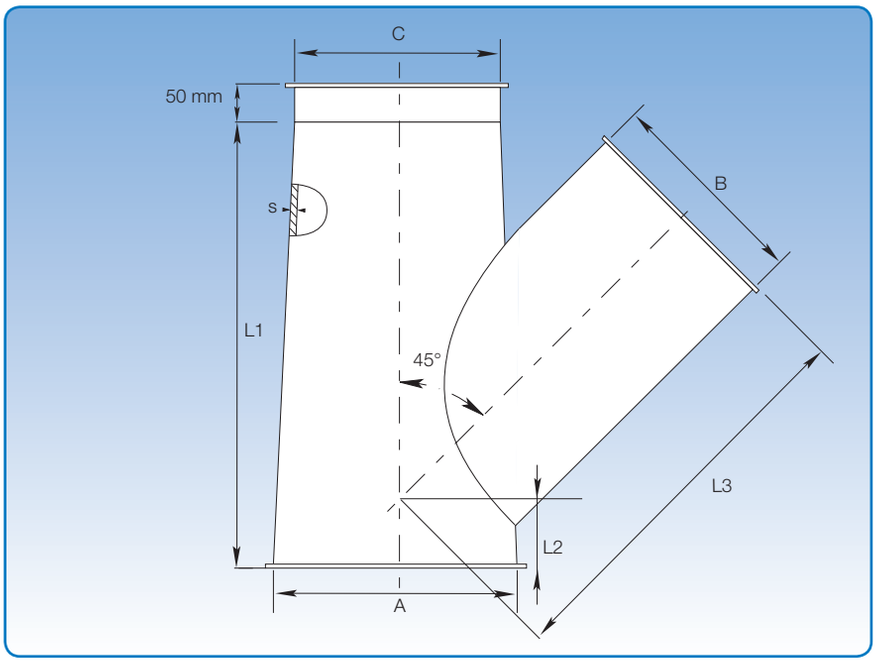

Calculating L2 and L3:

L1 = See table

$$L2 = \left(\frac{L1}{2}\right) - \left(\frac{A + C}{4 \times tg\ 45°}\right)$$

$$L3 = \left(\frac{L1-L2}{\cos 45°}\right) - \left(\frac{B}{2} \times tg\ 45°\right)$$

Example:

A = 650, B = 315, C = 600

L1 = 600 mm

$$L2 = \frac{600}{2} - \frac{650 + 600}{4 \times tg\ 45°} = 300 - 312{,}5$$

L2 = - 12,5 ~ - 13 mm

$$L3 = \frac{600 + 13}{\cos 45°} - \left(\frac{315}{2} \times tg\ 45°\right) = 866{,}92 - 157{,}5$$

L3 = 709,42 ~ 709 mm

Dimensions					
A mm	B mm	C mm	L1 mm	L2 mm	L3 mm
Select (100 - 1000)	80	Select (100 - 1000)	300	Calculate	Calculate
	100		300		
	120		350		
	125		350		
	140		350		
	150		400		
	160		400		
	180		400		
	200		450		
	225		500		
	250		500		
	275		600		
	300		600		
	315		600		
	350		700		
	400		800		
	450		950		
	500		1050		
	550		1150		
	600		1250		
	650		1150		
	700		1300		
	750		1300		
	800		1450		
	850		1450		
	900		1650		

30° trouser pieces, 2 and 3 mm

Diameter A for 2 mm: ø100 - ø1000 mm.
Diameter A for 3 mm: ø150 - ø1000 mm.

Trouser pieces are welded and made of 2.00 and 3.00 mm sheet metal (s).
Trouser pieces with A = B = C ≤ 600 mm are supplied for assembly with pull rings [f.b].
Trouser pieces with A = B = C ≥ 630 mm are supplied for assembly with flanges [m.fl].

Produced as straight trouser pieces when A=B=C.

State A, B and C dimensions when ordering.

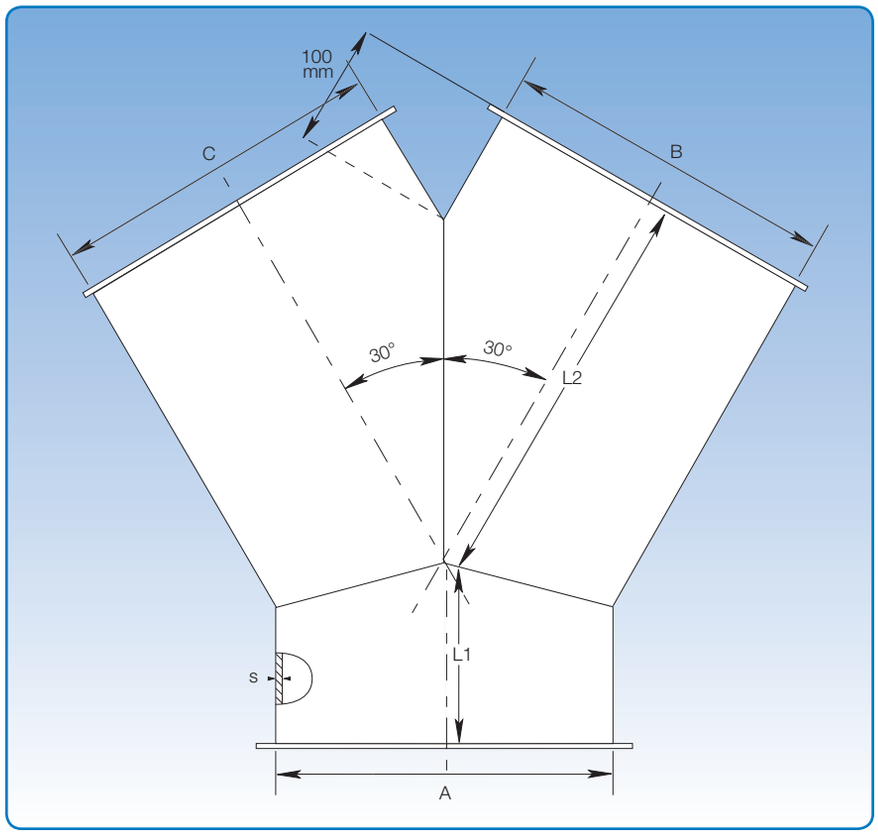

Calculating L1 and L2:

L1= 0,5 × A

L2= cos 30° × A + 100

Example:

A = B = C = 350

L1 = 0,5 × 350 = 175

L1 = 175 mm

L2 = (0,866 × 350) + 100 = 403,1

L2 = 403 mm

90° T-pieces, 2 and 3 mm

Diameter for 2 mm: ø80 – ø1000 mm.
Diameter for 3 mm: ø150 - ø1000 mm.

90° T-pieces are welded and made of 2.00 and 3.00 mm sheet metal (s). T-pieces with A = C ≤ 600 mm are supplied for assembly with pull rings [f.b]. T-pieces with A = C ≥ 630 mm are supplied with flanges [m.fl].

For dimensions: A = C ≥B.

State A, B and C dimensions when ordering.

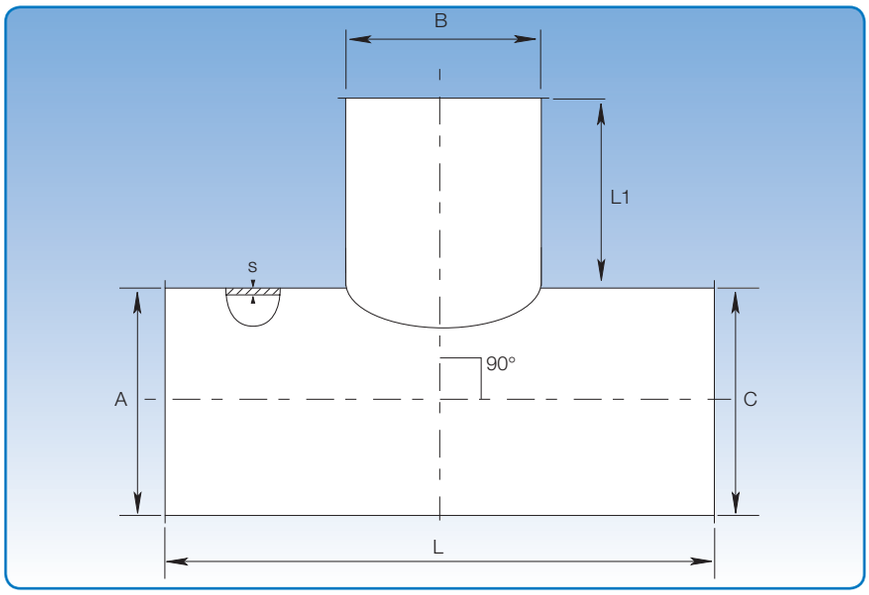

Dimensional specifications are given in the table below.

Dimensions

B mm	s mm	L mm	L1 mm
80	2,00	230	75
100	2,00	250	75
120	2,00	270	75
125	2,00	275	75
140	2,00	290	75
150	2,00 and 3,00	300	75
160	2,00 and 3,00	310	75
180	2,00 and 3,00	330	75
200	2,00 and 3,00	350	75
225	2,00 and 3,00	425	100
250	2,00 and 3,00	450	100
275	2,00 and 3,00	475	100
300	2,00 and 3,00	500	100
315	2,00 and 3,00	515	100
350	2,00 and 3,00	550	100
400	2,00 and 3,00	600	100
450	2,00 and 3,00	750	150
500	2,00 and 3,00	800	150
550	2,00 and 3,00	850	150
600	2,00 and 3,00	900	150
630	2,00 and 3,00	930	150
650	2,00 and 3,00	950	150
700	2,00 and 3,00	1100	200
750	2,00 and 3,00	1150	200
800	2,00 and 3,00	1200	200
850	2,00 and 3,00	1250	200
900	2,00 and 3,00	1300	200
950	2,00 and 3,00	1350	200
1000	2,00 and 3,00	1400	200

Tapers, 2 and 3 mm

Diameter A for 2 mm: ø100 - ø1000 mm.
Diameter A for 3 mm: ø160 - ø1000 mm.

Tapers are made in standard dimensions as stated in the table. Other dimensions can be made to order. Tapers with A ≤ 600 mm are supplied as standard for assembly with pull rings [f.b]. Tapers with A ≥ 630 mm are supplied as standard with flanges [m.fl]. When ordering standard tapers, state A and B dimensions and assembly method. L will depend on the difference between A and B.

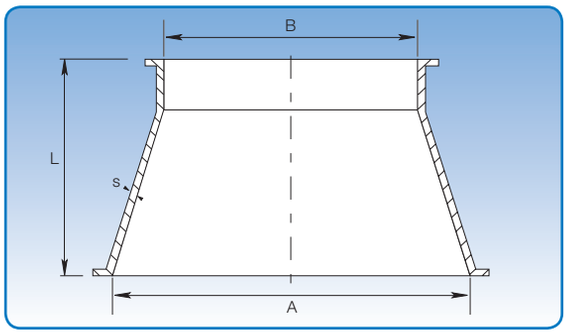

Dimensional specifications for standard tapers are given in the table below.

Dimensions

Item no.	A mm	B mm	s mm	L mm	Weight kg
1842417	100	80	2,00	150	0,74
1842428	120	100	2,00	150	0,89
1844435	125	100	2,00	150	0,92
1844437	125	120	2,00	150	0,92
1844448	140	100	2,00	200	1,38
1846454	150	100	2,00	200	1,48
1846455	150	120	2,00	200	1,48
1846456	150	125	2,00	150	1,11
1846457	150	140	2,00	150	1,11
1847464	160	100	2,00	250	1,97
1847465	160	120	2,00	200	1,58
1847466	160	125	2,00	200	1,58
1847467	160	150	2,00	150	1,18
1847468	160	140	2,00	150	1,18
1848475	180	100	2,00	300	1,84
1848476	180	125	2,00	250	1,68
1848477	180	150	2,00	200	1,57
1849482	200	100	2,00	300	1,98
1849483	200	125	2,00	250	1,79
1849484	200	140	2,00	250	1,88
1849485	200	150	2,00	200	1,65
1849486	200	160	2,00	200	1,68
1849487	200	180	2,00	150	1,36
1850496	225	180	2,00	150	1,66
1850497	225	200	2,00	200	2,22
1851399	250	150	2,00	300	3,70
1851401	250	160	2,00	300	3,70
1851403	250	180	2,00	250	3,08
1851405	250	200	2,00	200	2,47
1851407	250	225	2,00	150	1,85
1852110	275	250	2,00	150	2,03
1852111	275	225	2,00	200	2,71
1852112	275	200	2,00	250	3,39
1852415	300	200	2,00	300	4,44
1852416	300	225	2,00	250	3,70
1852417	300	250	2,00	200	2,96
1852418	300	275	2,00	150	2,22
1853426	315	300	2,00	150	2,33
1853427	315	275	2,00	200	3,11
1853428	315	250	2,00	250	3,88
1854435	350	250	2,00	300	5,18
1854436	350	275	2,00	200	3,45
1854437	350	300	2,00	250	4,32
1855445	400	315	2,00	300	5,92
1855446	400	350	2,00	300	5,92
1855447	400	300	2,00	250	4,93

Tapers, 2 and 3 mm

Dimensions					
Item no.	A mm	B mm	s mm	L mm	Weight kg
1856458	450	350	2,00	200	4,44
1857466	500	450	2,00	300	6,66
1857467	450	400	2,00	200	4,93
1857468	500	400	2,00	300	7,40
1858478	550	450	2,00	300	8,14
1859488	600	500	2,00	300	8,88
1860498	630	550	2,00	300	14,82
1861408	650	550	2,00	300	15,17
1862418	700	600	2,00	300	17,38
1863428	750	650	2,00	300	19,94
1864438	800	700	2,00	300	11,84
1865448	850	750	2,00	300	21,71
1866458	900	800	2,00	300	23,63
1867458	950	850	2,00	300	24,97
1868458	1000	900	2,00	300	26,30
1846760	160	150	3,00	150	1,78
1849780	200	150	3,00	200	2,66
1849781	200	160	3,00	200	2,74
1849782	200	180	3,00	150	2,16
1850796	225	180	3,00	200	3,03
1850797	225	200	3,00	150	2,39
1851706	250	225	3,00	150	2,66
1851707	250	200	3,00	200	3,48
1852210	275	250	3,00	150	3,00
1852211	275	225	3,00	200	3,11
1852715	300	200	3,00	300	5,77
1852717	300	250	3,00	200	4,14
1852718	300	275	3,00	150	3,22
1853727	315	275	3,00	200	4,44
1853728	315	300	3,00	150	3,44
1854735	350	300	3,00	200	4,88
1854736	350	315	3,00	200	5,03
1855748	400	350	3,00	200	5,62
1856758	450	400	3,00	200	6,36
1857767	500	400	3,00	300	10,21
1857768	500	450	3,00	200	7,10
1858778	550	450	3,00	300	11,32
1859788	600	500	3,00	300	12,43
1860798	630	550	3,00	300	18,60
1861708	650	550	3,00	300	19,09
1862718	700	600	3,00	300	21,67
1883728	750	650	3,00	300	24,60
1864738	800	700	3,00	300	26,00
1865748	850	750	3,00	300	27,71
1866758	900	800	3,00	300	29,40
1867758	950	850	3,00	300	31,11
1868758	1000	900	3,00	300	32,81

Specifications for relationship between diameter (A - B) and length (L) for non-standard tapers. Length L will depend on the difference between A and B. Please state A, B and L measurements when ordering.

A - B [mm]	25	50	75	100	125	150	175	200	225	250	275	300
L [mm]	100	150	200	250	300	350	400	450	500	550	600	650

Transition pieces, 2 and 3 mm

Diameter D for 2 mm: ø120 - ø1000 mm.
Diameter D for 3 mm: ø150 - ø1000 mm.

Transition pieces are made of 2.00 and 3.00 mm sheet metal (s).

Transition pieces with D ≤ 600 mm are supplied as standard for assembly with pull rings [f.b]. Transition pieces with D ≥ 650 mm are supplied with flanges [m.fl].

State dimensions for BU × LU and D plus assembly method when ordering (p. 7).

Can be made to order in other dimensions. Also available in asymmetric format.

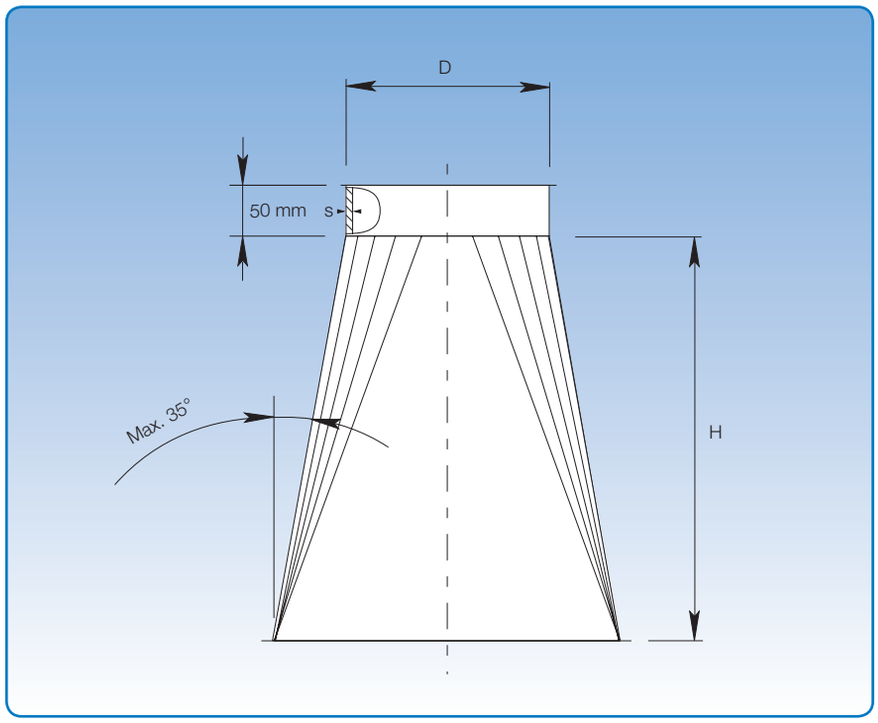

Calculating H:

H = 240 + 0,5 × (max. value of LU – D)
or (BU – D)

Example:

D = 350, LU = 400, BU = 600, EXL = 200, EXB = 300

H = 240 + (0,5 × 250) = 240 + 125

H = 365 mm

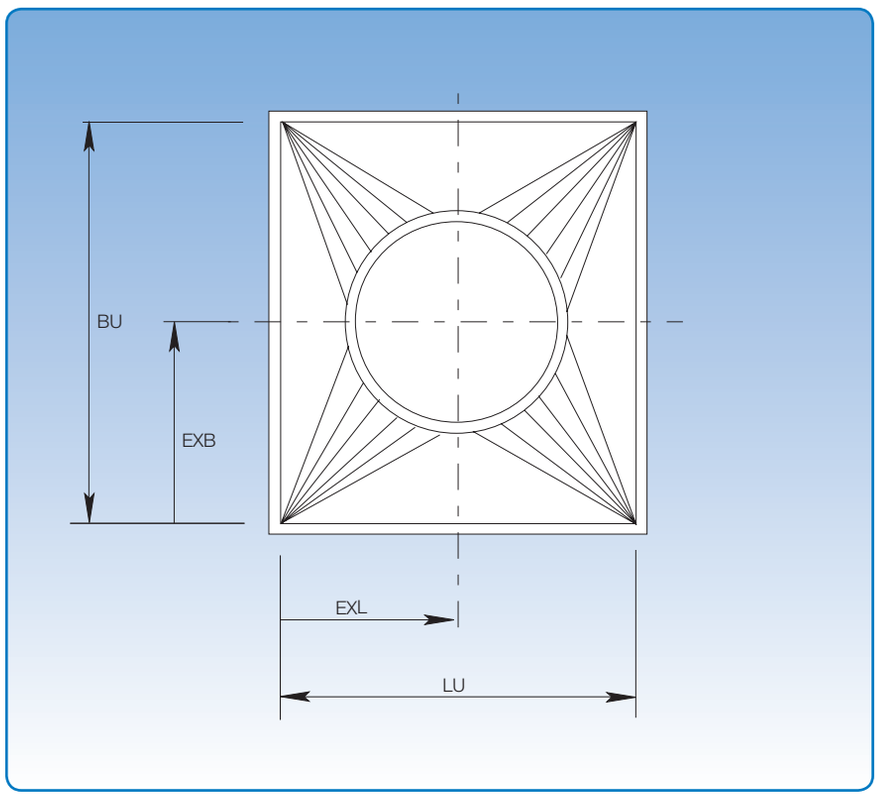

JK-6" duct systems

Technical catalogue:	Duct systems
Section:	03
Page:	1/2
Revised:	01.05.2009

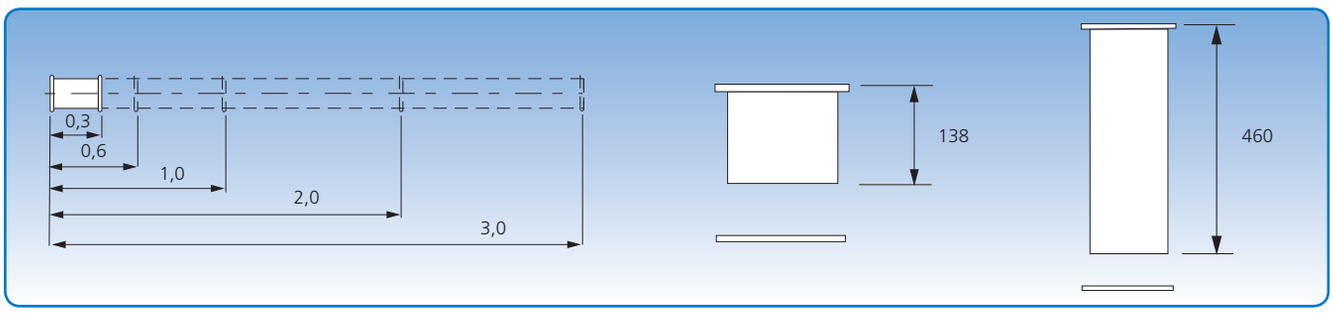

JK-6" duct systems, galvanised *0.1 m telescopic ducts, galvanised* *0.5 m telescopic ducts, galvanised*

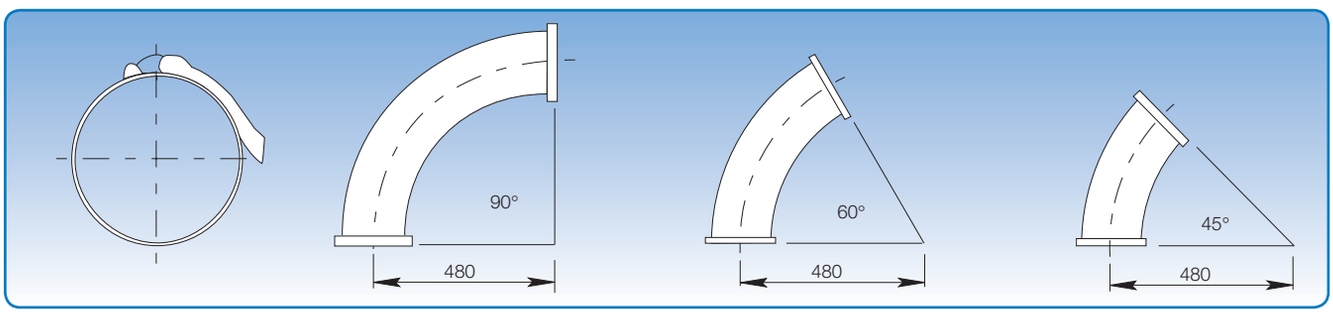

Rapid lock pull rings, galvanised *90° bends, grey* *60° bends, grey* *45° bends, grey*

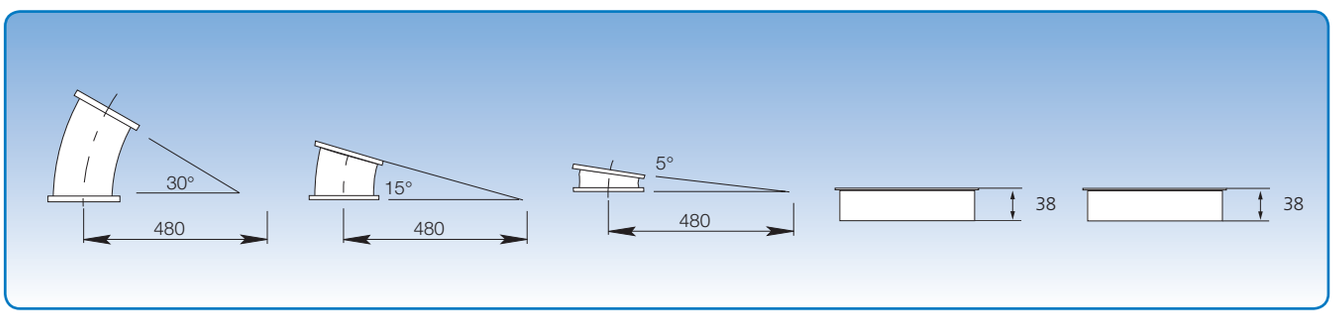

30° bends, grey *15° bends, grey* *5° bends, grey* *Welding ends, 1.0 mm* *Welding ends, 2.0 mm*

The JK-6" duct system is specially designed for fast installation and tight, smooth assemblies. Assembly method is rapid lock pull rings.

The special design facilitates high transport capacity and with minimum risk. The rolled ends of the JK-6" system provide strength and minimise the risk of transport damage.

JK-6" duct systems

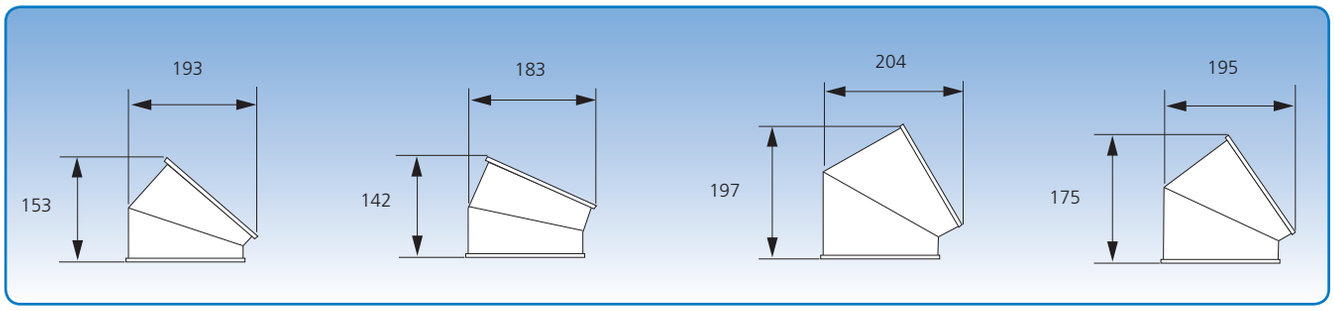

30° segment bends, 1.5 mm, grey *15° segment bends, 1.5 mm, grey* *60° segment bends, 1.5 mm, grey* *45° segment bends, 1.5 mm, grey*

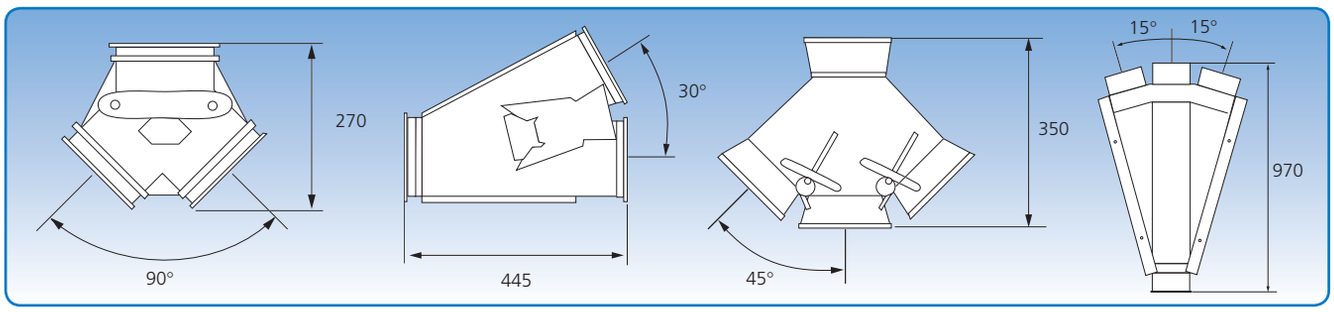

Trouser diverters, 45°, grey *Branch diverters, 30°, grey* *Three-way diverters, 45°, grey* *Three-way diverters, 15°, grey*

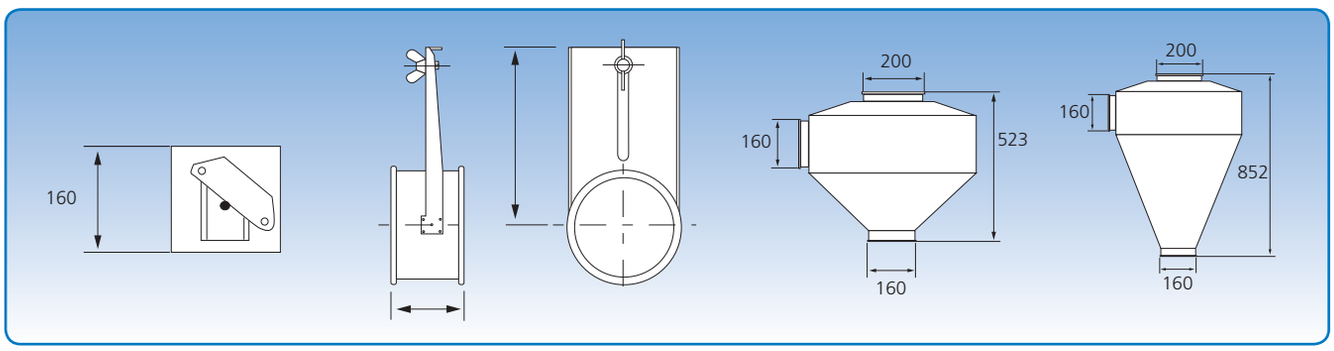

Spring-loaded throttle valves, grey *Bulkheads, grey* *Exhaust cyclones, galvanised* *Dust cyclones, galvanised*

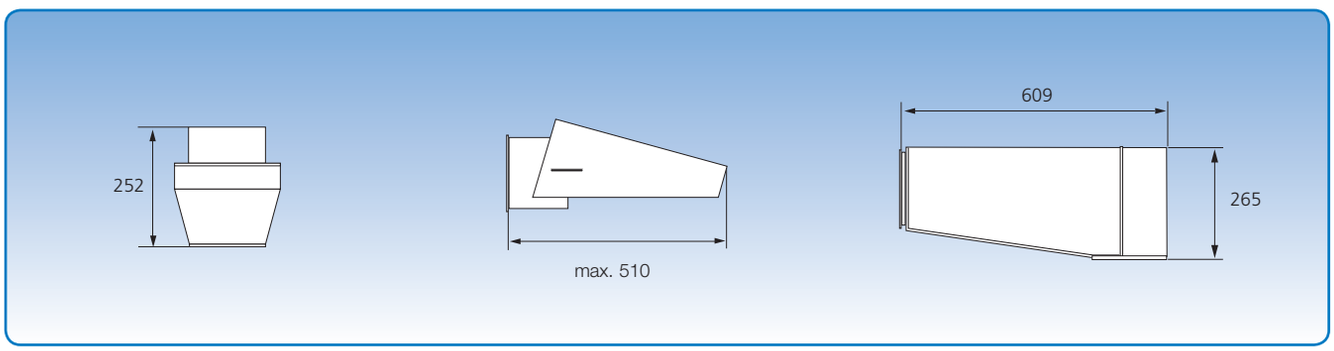

Swing outlets, grey *Outlet nozzles, blue* *Exhaust heads, galvanised*

Automation for sliding dampers, throttle valves and diverters

The circuit diagrams shown apply to standard systems for sliding dampers, diverters and throttle valves.

These systems are valid for pneumatic connection of max. 6 bar and mains connection of 230 V AC.
Systems with other voltage ratings can be supplied.

Relevant circuit diagrams can be supplied for other voltages.

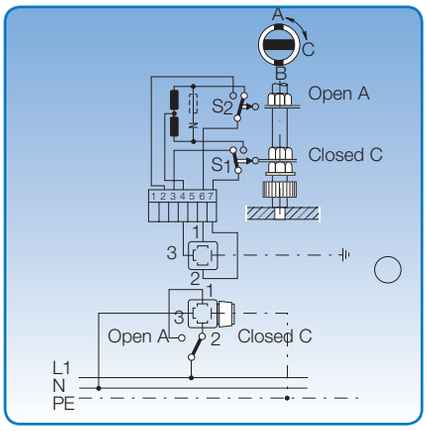

Circuit diagram for electrical motor for diverters, pressed, diameter: ø100 - ø300 mm.

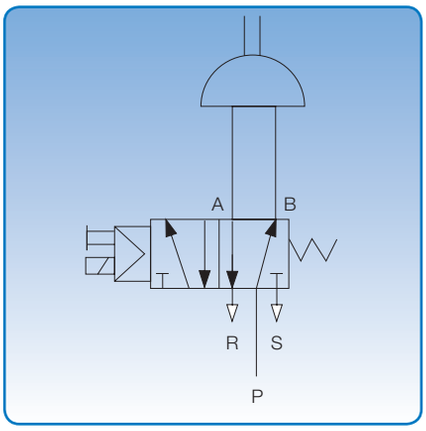

Circuit diagram for pneumatic actuator for diverters, pressed, diameter: ø100 - ø300 mm and throttle valves, diameter: ø80 - ø400 mm.

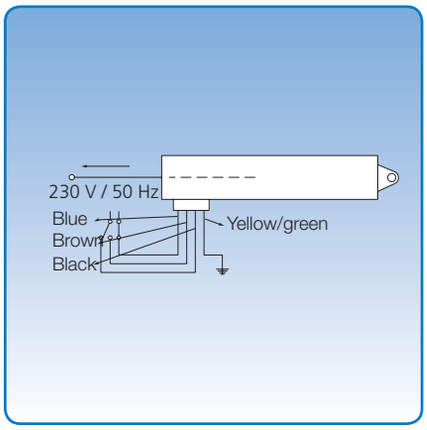

Circuit diagram for electrical cylinder for diverters, welded, diameter: ø80 - ø550 mm and sliding damper standard, diameter: ø80 - ø275 mm.

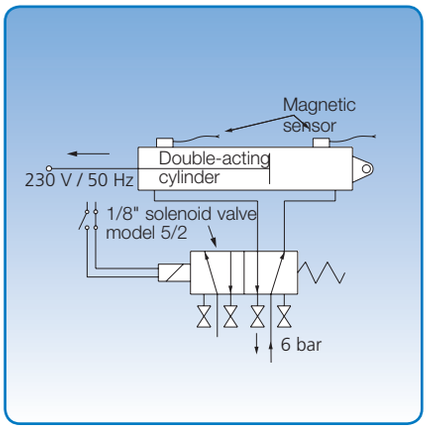

Circuit diagram for pneumatic cylinder for diverters, welded, diameter: ø80 - ø550 mm and sliding damper standard, diameter: ø80 - ø550 mm.

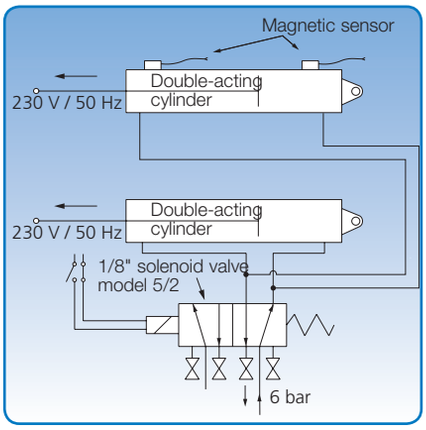

Circuit diagram for 2 pneumatic cylinders for tight sliding dampers, diameter: ø80 - ø550 mm.

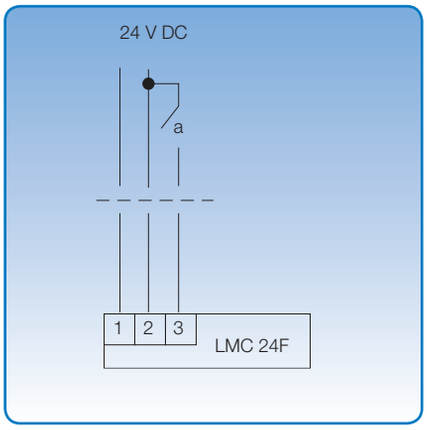

Circuit diagram for 24 V DC electric motor for throttle valves.

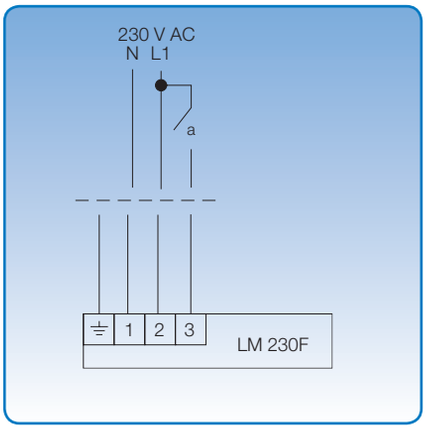

Circuit diagram for 230 V AC electric motor for throttle valves.

Tight sliding dampers, galvanised, manual & pneumatic

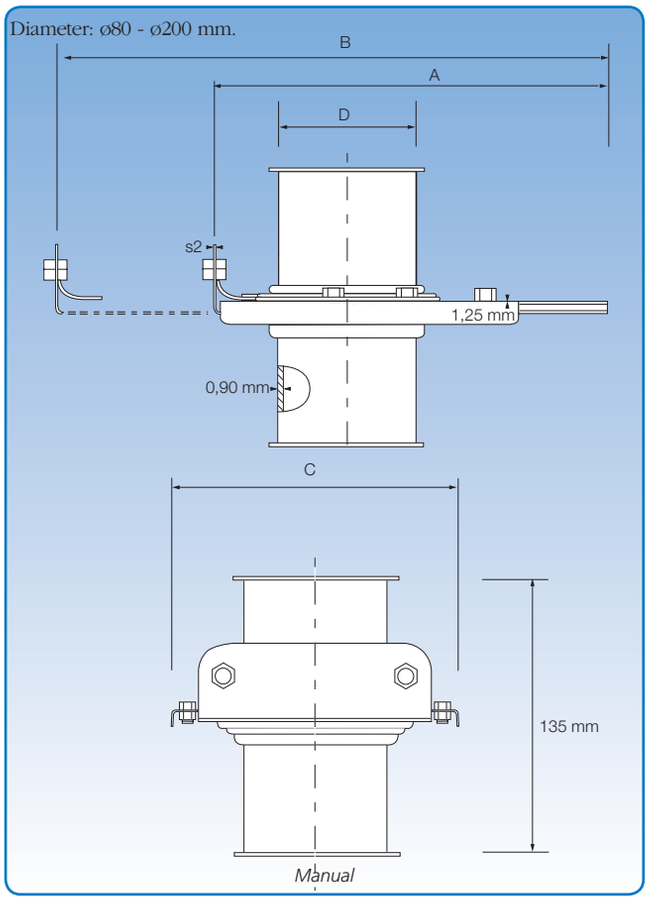

Dimensional specifications are given in the table below.

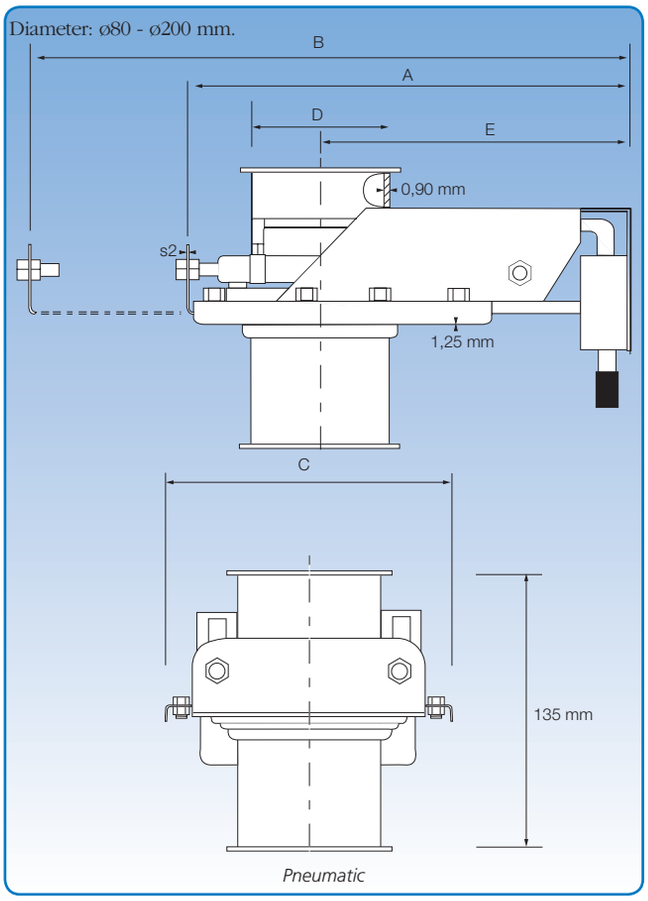

Dimensional specifications are given in the table below.

General

Sliding dampers are made of form-pressed half-parts, in 1.25 mm galvanised sheet metal.

The damper plate slides in the polyether and PEHD gaskets to ensure optimum tightness.

With pneumatic actuator

The pneumatic damper is fitted with 2 pneumatic cylinders running in parallel.

Solenoid valve: monostable 5/2 valve with 1 x 230 V AC - 50/60 Hz electric coil or 24 V DC. Pneumatic pressure: 4-6 bar.

Dimensions

Item no. (Man.)	Item no. (Pneu.)	D mm	s2 mm	A (Man.) mm	A (Pneu.) mm	B (Man.) mm	B (Pneu.) mm	C mm	E mm	Weight (Man.) kg	Weight (Pneu.) kg
1410112	1410412	80	1,50	225	260	320	355	160	190	1,20	2,30
1411112	1411412	100	1,50	265	305	380	415	190	225	1,50	3,80
1412112	1412412	120	2,00	325	360	460	500	215	260	2,10	3,60
1413112	1413412	125	2,00	325	360	460	500	215	260	2,10	3,60
1414112	1414412	140	2,00	375	415	540	580	240	300	2,90	3,80
1415112	1415412	150	2,00	375	415	540	580	240	300	2,90	4,40
1416112	1416412	160	2,00	405	445	585	620	250	325	3,20	4,90
1418112	1418412	180	2,00	455	495	655	695	290	355	4,10	6,00
1420112	1420412	200	2,00	485	525	705	745	300	385	4,40	6,30

The item numbers stated are for sliding dampers assembled using pull rings [f.b].

Sliding dampers are also available for other assembly methods. See p. 6 for assembly methods.

Tight sliding dampers, galvanised, manual & pneumatic

Diameter: ø225 - ø550 mm.

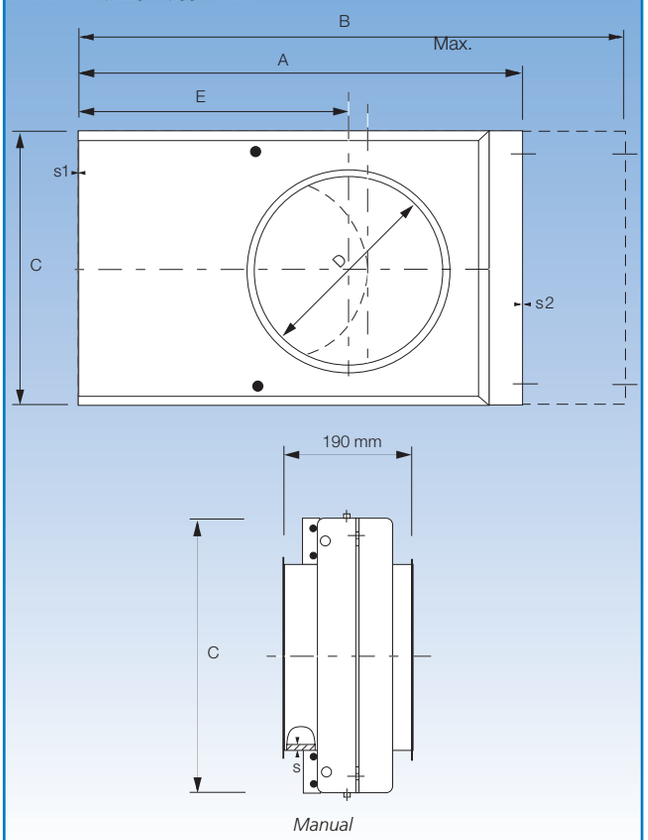

Manual

Dimensional specifications are given in the table below.

Diameter: ø225 - ø550 mm.

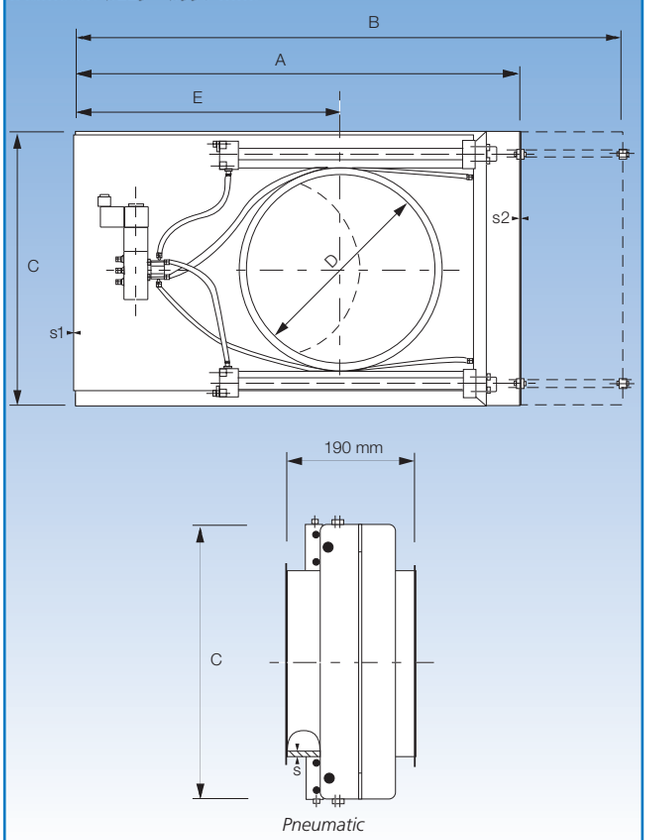

Pneumatic

Dimensional specifications are given in the table below.

General

Sliding dampers are made of 1.50 mm, 2.00 mm and 2.50 mm galvanised sheet metal (s).

The damper plate slides in the polyether and PEHD gaskets to ensure optimum tightness.

With pneumatic actuator

The pneumatic damper is fitted with 2 pneumatic cylinders running in parallel.

Solenoid valve: monostable 5/2 valve with 1 x 230 V AC - 50/60 Hz electric coil or 24 V DC. Pneumatic pressure: 4-6 bar.

Dimensions

Item no. (Man.)	Item no. (Pneu.)	D mm	s mm	s1 mm	s2 mm	A mm	B max. mm	C mm	E mm	Weight (Man.) kg	Weight (Pneu.) kg
1422112	1422412	225	1,50	1,50	2,50	580	830	360	390	10,70	13,40
1425112	1425412	250	1,50	1,50	2,50	660	960	385	455	14,00	15,00
1427112	1427412	275	2,00	2,00	3,00	680	980	410	465	17,60	19,78
1430112	1430412	300	2,00	2,00	3,00	725	1045	435	495	18,90	21,00
1431112	1431412	315	2,00	2,00	3,00	855	1255	485	600	25,40	27,90
1435112	1435412	350	2,00	2,00	3,00	855	1255	485	600	24,60	26,00
1440112	1440412	400	2,00	2,50	3,00	1005	1505	545	725	35,60	36,84
1445112	1445412	450	2,00	2,50	3,00	1055	1555	595	750	40,60	44,60
1450112	1450412	500	2,00	3,00	3,00	1140	1670	645	805	50,50	56,20
1455112	1455412	550	2,00	3,00	3,00	1301	1901	691	915	60,70	65,30

The item numbers stated are for sliding dampers assembled using pull rings [f.b].

Sliding dampers are also available for other assembly methods. See p. 6 for assembly methods.

Sliding dampers, galvanised, manual

Diameter: ø80 - ø500 mm.

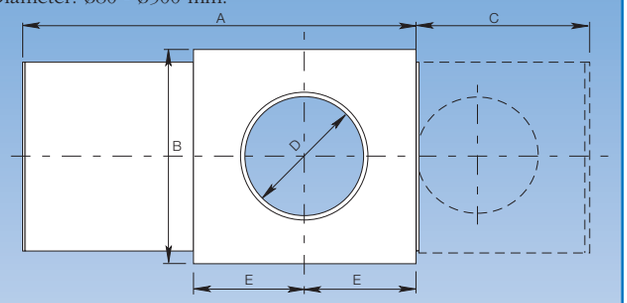

Dimensional specifications for diameter (D) are given in the table below.

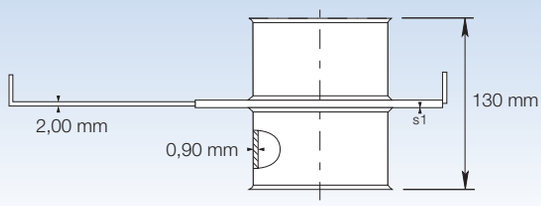

Dimensional specifications for integration length (L) are given in the table below.

Sliding dampers are made of 1.25 and 1.50 mm galvanised sheet metal with a damper of 2.00 mm galvanised sheet metal.

Dimensions							
Item no. (Man.)	D mm	s1 mm	A mm	B mm	C mm	E mm	Weight kg
1470112	80	1,25	255	145	105	75	1,10
1471112	100	1,25	340	185	150	95	1,60
1472112	120	1,25	340	185	150	95	1,70
1473112	125	1,25	340	185	150	95	1,80
1474112	140	1,25	405	225	175	115	2,40
1475112	150	1,25	405	225	175	115	2,30
1476112	160	1,25	405	225	175	115	2,30
1477112	180	1,25	525	295	225	150	3,80
1478112	200	1,25	525	295	225	150	4,00
1479112	225	1,50	590	325	270	160	4,60
1480112	250	1,50	650	350	300	175	5,20
1480142	275	1,50	705	380	325	190	6,40
1481112	300	1,50	755	400	345	205	6,50
1481142	315	1,50	785	420	365	210	7,00
1482112	350	1,50	885	450	435	200	7,60
1483112	400	1,50	960	500	460	250	9,30
1485112	450	1,50	1050	550	500	275	10,70
1486112	500	1,50	1160	600	550	300	14,10

The item numbers stated are for sliding dampers assembled using pull rings [f.b].

Sliding dampers are also available for other assembly methods. See p. 6 for assembly methods.

Sliding dampers, galvanised, pneumatic and electric

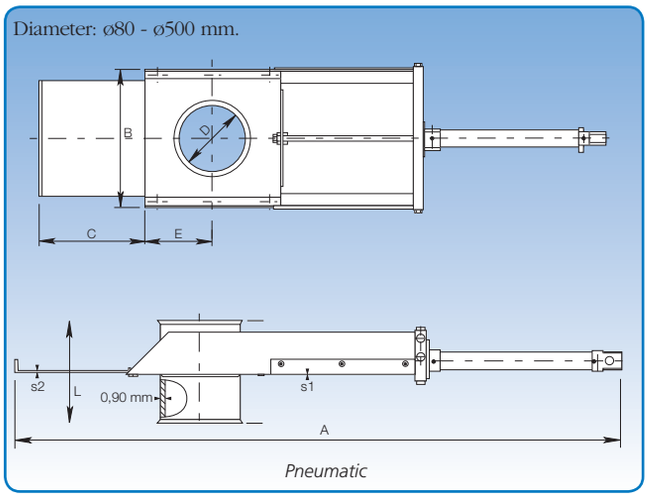

Dimensional specifications for integration length (L) are given in the table below.

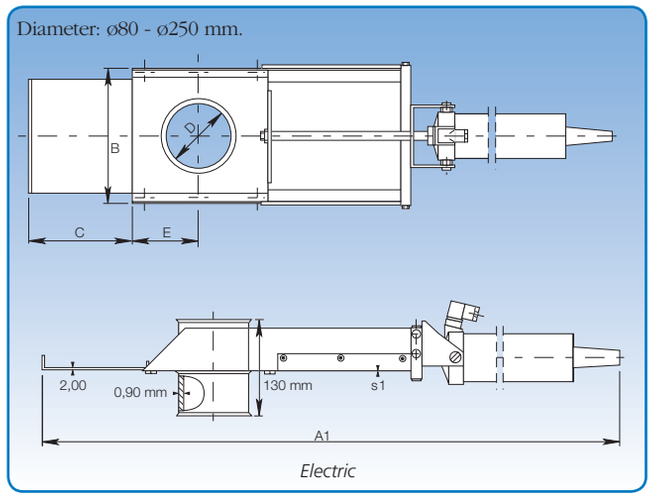

Dimensional specifications for integration length (L) are given in the table below.

General

Sliding dampers are made of 0.90 mm galvanised sheet metal (s) with a damper of 2.00 mm galvanised sheet metal (s2).
Pneumatic pressure: 4-6 bar.
Damper is fitted with a pneumatic cylinder.
Solenoid and setting switches for position indication available as optional extras.

With electric actuator

Damper fitted with a 230 V AC - 50 Hz electric shaft motor.

Dimensions											
Item no. (Pneu.)	Item no. (Elec.)	D mm	s1 mm	A mm	A1 mm	B mm	C mm	C1 mm	E mm	Weight (Pneu.) kg	Weight (Elec.) kg
1470512	1470312	80	1,25	550	700	145	105	100	75	3,24	5,20
1471512	1471312	100	1,25	800	865	185	150	160	95	4,19	6,20
1472512	1472312	120	1,25	800	865	185	150	160	95	4,51	6,43
1473512	1473312	125	1,25	800	865	185	150	160	95	4,51	6,27
1474512	1474312	140	1,25	975	980	225	175	200	115	5,46	7,41
1475512	1470312	150	1,25	975	980	225	175	200	115	5,50	5,50
1476512	1476312	160	1,25	975	980	225	175	200	115	5,70	7,50
1477512	1477312	180	1,25	1180	1250	295	225	250	150	8,10	9,40
1478512	1478312	200	1,25	1180	1250	295	225	250	150	8,60	9,70
1479512	1479312	225	1,50	1365	1370	325	270	300	160	9,50	10,60
1480512	1480312	250	1,50	1390	1400	350	300	300	175	10,90	11,40
1480262	-	275	1,50	1725	-	380	325	-	190	12,77	-
1481512	-	300	1,50	1750	-	400	345	-	205	14,40	-
1481442	-	315	1,50	1770	-	420	365	-	210	14,90	-
1482512	-	350	1,50	2000	-	450	435	-	200	16,90	-
1483512	-	400	1,50	2150	-	500	460	-	250	19,60	-
1485512	-	450	1,50	2225	-	550	500	-	275	23,90	-
1486512	-	500	1,50	2575	-	600	550	-	300	27,80	-

The item numbers stated are for sliding dampers assembled using pull rings [f.b].
Sliding dampers are also available for other assembly methods. See p. 6 for assembly methods.

Throttle valves, galvanised, manual, pneumatic and electric

Diameter: ø80 - ø160 mm.

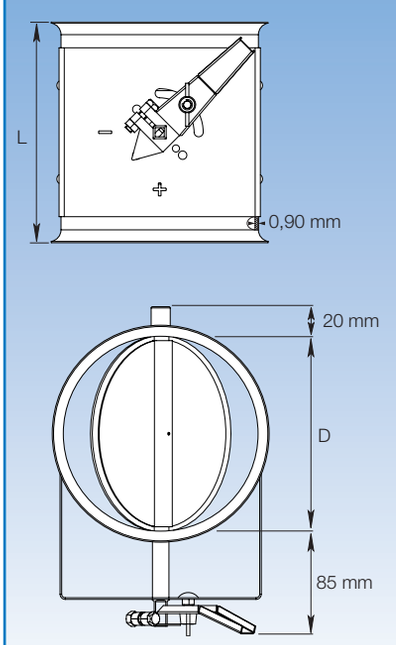

Manual

Diameter: ø80 - ø160 mm.

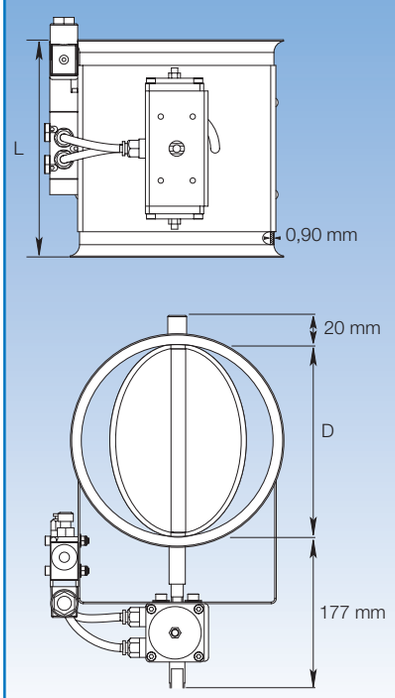

Pneumatic

Diameter: ø80 - ø160 mm.

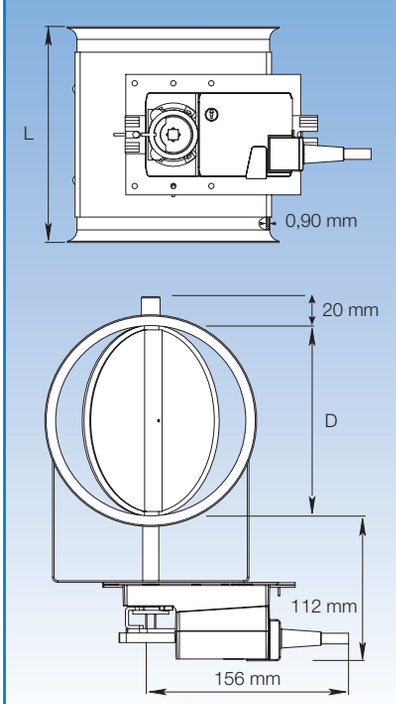

Electric

General

Galvanised throttle valves are made of 0.90 mm sheet metal and damper in double sheet. Throttle handle indicates damper position, and can be variably set between open and closed.
Available with natural rubber gasket.
Maximum closure 96%.
Larger throttle valves can be supplied upon request.

With pneumatic actuator

The damper is turned by a pneumatic actuator controlled by an electrically-operated valve.
Solenoid valve: monostable 5/2 valve with 1 x 230 V AC - 50/60 Hz electric coil or 24 V DC. Pneumatic pressure: 4-6 bar.
Valve setting indicators are available as an optional extra. Solenoid included as standard.

With electric actuator

The damper is operated by an electric motor activated by a changeover switch.
Valve setting indicators are available as an optional extra.
Electrical connection: 230 V AC - 50 Hz or 24 V DC.

Dimensions

Item no. (Man.)	Item no. (Pneu.)	Item no. (Elec.)	D mm	L mm	Weight (Man.) kg	Weight (Pneu.) kg	Weight (Elec.) kg
1510112	1510412	1510312	80	125	0,65	1,90	1,60
1511112	1511412	1511312	100	125	0,75	2,00	1,70
1512112	1512412	1512312	120	135	0,90	2,15	1,85
1513112	1513412	1513312	125	135	0,95	2,20	1,90
1514112	1514412	1514312	140	170	1,15	2,40	2,10
1515112	1515412	1515312	150	170	1,25	2,50	2,20
1516112	1516412	1516312	160	170	1,35	2,60	2,30

The item numbers stated are for throttle valves assembled using pull rings [f.b].
Throttle valves are also available for other assembly methods. See p. 6 for assembly methods.

Throttle valves, galvanised, manual, pneumatic and electric

Diameter: ø180 - ø500 mm.

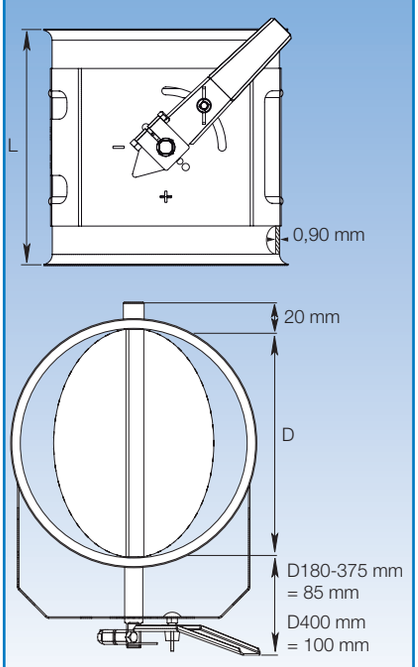

Manual

Diameter: ø180 - ø500 mm.

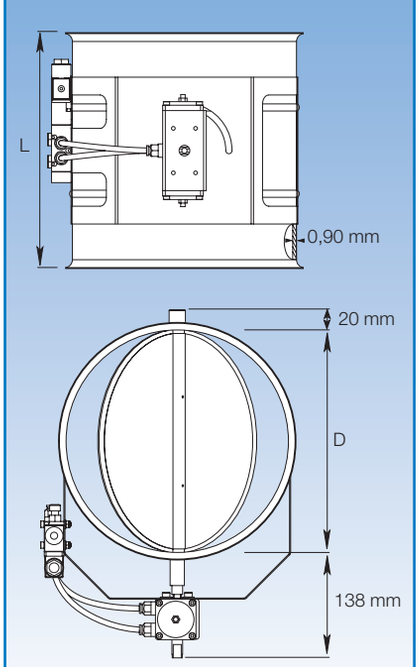

Pneumatic

Diameter: ø180 - ø500 mm.

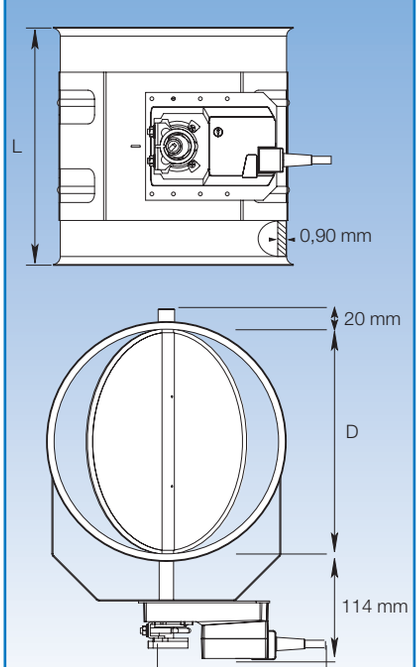

Electric

General

Throttle valves are made of 0.90 mm sheet metal and damper in double sheet.
Throttle handle indicates damper position, and can be variably set between open and closed. Available with natural rubber gasket.
Maximum closure 96%. Larger throttle valves can be supplied upon request.

With pneumatic actuator

The damper is turned by a pneumatic actuator controlled by an electrically-operated valve.
Solenoid valve: monostable 5/2 valve with 1 x 230 V AC - 50/60 Hz electric coil or 24 V DC.
Pneumatic pressure: 4-6 bar.
Valve setting indicators are available as an optional extra.
Larger throttle valves can be made to order.

With electric actuator

The damper is operated by an electric motor activated by a changeover switch.
Valve setting indicators are available as an optional extra.
Electrical connection: 230 V AC - 50 Hz or 24 V DC.
Larger throttle valves can be made to order.

Dimensions

Item no. (Man.)	Item no. (Pneu.)	Item no. (Elec.)	D mm	L mm	Weight (Man.) kg	Weight (Pneu.) kg	Weight (Elec.) kg
1517112	1517412	1517312	180	210	1,90	2,85	3,55
1518112	1518412	1518312	200	210	2,20	3,15	3,85
1519112	1519412	1519312	225	240	2,55	3,60	4,20
1520112	1520412	1520312	250	265	3,05	4,00	5,05
1520612	1520812	1520712	275	290	3,50	4,50	5,50
1521112	1521412	1521312	300	315	4,30	5,20	6,30
1521612	1521812	1521712	315	330	4,30	5,50	6,50
1522112	1522412	1522312	350	365	4,77	6,30	6,50
1523112	1523412	1523312	400	415	5,50	7,60	7,50
1524112	1524412	1524312	450	465	6,10	9,30	9,70
1525112	1525412	1525312	500	515	13,10	11,03	11,45

The item numbers stated are for throttle valves assembled using pull rings [f.b].
Throttle valves are also available for other assembly methods. See p. 6 for assembly methods.

60° branch diverters, pressed, manual, pneumatic and electric

Diameter: ø100 - ø300 mm.

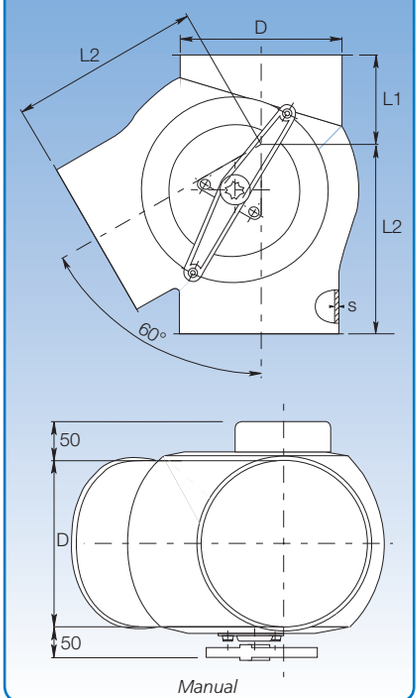

Manual

Diameter: ø100 - ø300 mm.

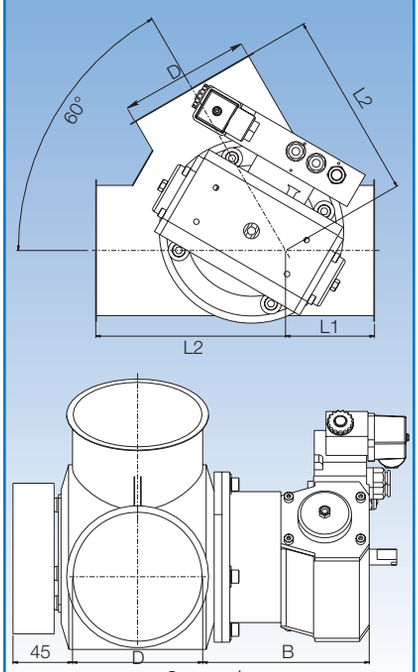

Pneumatic

Diameter: ø100 - ø300 mm.

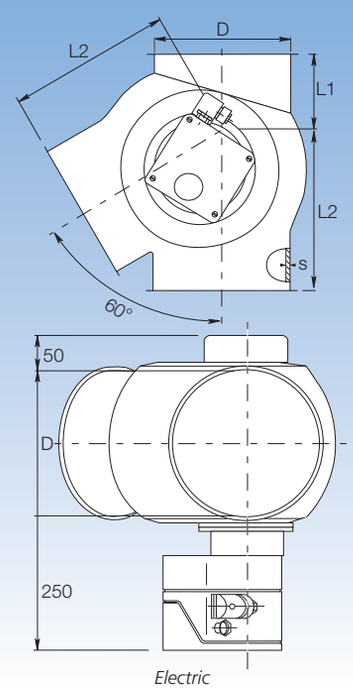

Electric

Dimensional specifications are given in the table below.

General

60° branch diverters, pressed, designed for falling and forced direction transport. Damper suspended on brass bearings. Supplied as standard with left branch.

With pneumatic actuator

The damper is turned by a pneumatic actuator controlled by an electrically-operated valve. Solenoid valve: monostable 5/2 valve with 1 x 230 V AC - 50/60 Hz electric coil or 24 V DC. Pneumatic pressure: 4-6 bar. Valve setting indicators are available as an optional extra.

With electric actuator

The damper is operated by an electric motor activated by a changeover switch. Electrical connection: 230 V AC - 50 Hz or 24 V DC.
Valve setting indicators are supplied as standard.

Dimensions

Item no. (Man.)	Item no. (Pneu.)	Item no. (Elec.)	D mm	s mm	B mm	L1 mm	L2 mm	Weight (Man.) kg	Weight (Pneu.) kg	Weight (Elec.) kg
1700036	1720036	1710036	100	1,50	145	70	145	2,20	5,20	6,90
1701036	1721036	1711036	120	1,50	145	160	240	6,00	9,00	10,70
1702036	1722036	1712036	125	1,50	145	90	170	4,00	7,00	8,70
1703036	1723036	1713036	150	2,00	145	100	190	5,70	8,70	10,40
1704036	1724036	1714036	160	2,00	145	95	225	6,10	9,10	10,80
1705036	1725036	1715036	180	2,00	145	195	315	11,00	14,00	15,70
1706036	1726036	1716036	200	2,00	145	110	230	8,30	11,30	13,00
1707036	1727036	1717036	250	2,00	145	135	270	13,10	16,10	17,90
1708036	1727336	1717336	300	2,00	145	160	325	19,30	22,30	24,10

The item numbers stated are for branch diverters assembled using pull rings [f.b].
Branch diverters are also available for other assembly methods. See p. 7 for assembly methods.

45° branch diverters, pressed, manual

Suggestion for use of JKF bends. Example shows a trouser diverter and two 15° bends.

Pressed diverters are made of 1.50 - 2.00 mm sheet metal (s) with a standard 2.00 mm damper suspended on brass bearings.

Supplied as standard with left branch.

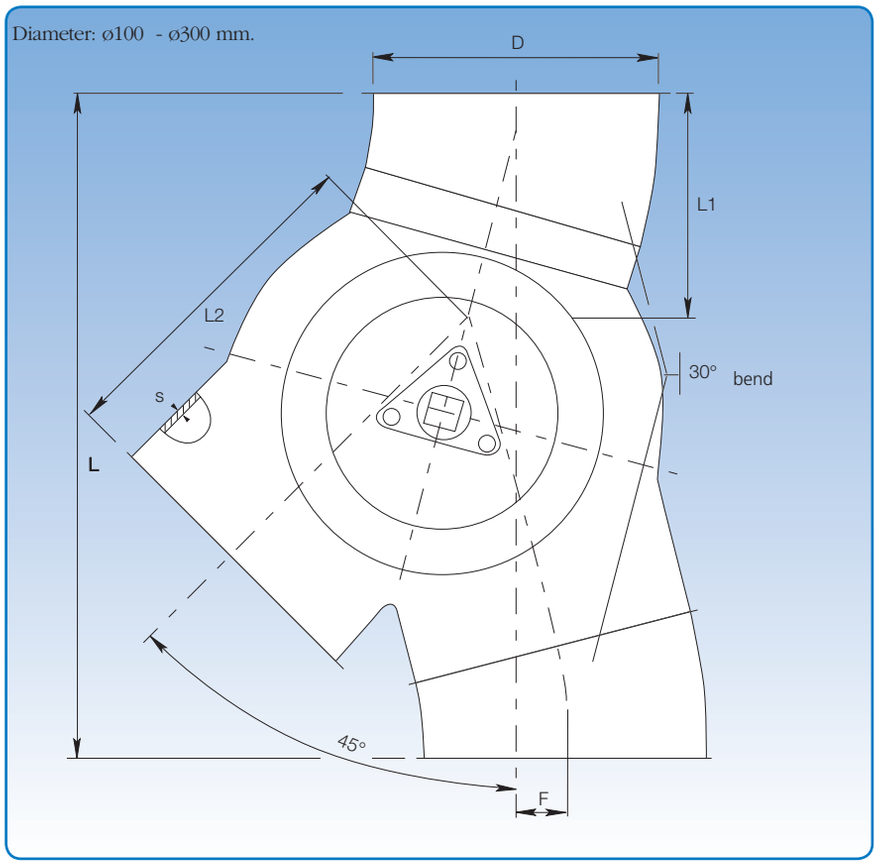

Dimensional specifications are given in the table below.

Dimensions

D mm	s mm	F mm	L mm	L1 mm	L2 mm	Weight kg
100	1,50	25	270	100	145	2,80
120	1,50	25	380	145	240	5,90
125	1,50	25	335	120	170	5,30
150	2,00	30	375	135	190	7,80
160	2,00	40	410	130	225	7,80
180	2,00	40	600	230	315	13,40
200	2,00	40	455	155	230	11,30
250	2,00	35	550	190	270	17,70
300	2,00	55	660	230	325	25,90

45° branch diverters, welded, manual, pneumatic and electric

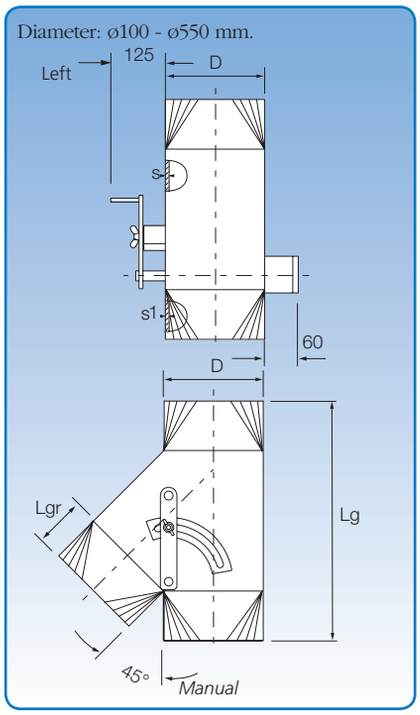

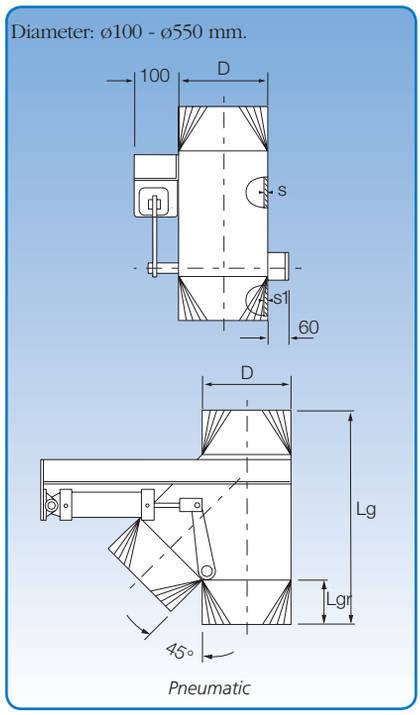

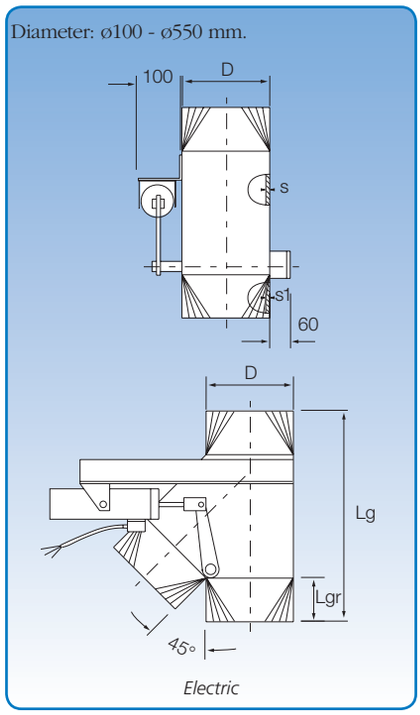

General

Diameter: ø100 - ø550 mm.
Designed for falling and pneumatic transport.
Available with rubber gasket on damper plate for pneumatic transport.
Damper suspended on nylon bearings.
Supplied as standard with left branch.

With pneumatic actuator

The damper is turned by a pneumatic cylinder controlled by an electrically-operated valve.
Solenoid valve: monostable 5/2 valve with 1 x 230 V AC - 50/60 Hz electric coil or 24 V DC.
Pneumatic pressure: 4-6 bar. Valve setting indicators are available as an optional extra.

With electric actuator

The damper is operated by an electric motor activated by a changeover switch. Power supply: 230 V AC - 50 Hz. Switch box with damper setting indicators available as an optional extra. Not supplied with profile for damper plate.

Dimensions

Item no. (Man.)	Item no. (Pneu.)	Item no. (Elec.)	D mm	s mm	s1 mm	Damper plate mm	Lg mm	Lgr mm	Weight (Man.) kg	Weight (Pneu.) kg	Weight (Elec.) kg
1700064	1740064	1710064	100	3,00	2,00	4,00	360	105	2,80	5,80	7,50
1701064	1741064	1711064	120	3,00	2,00	4,00	400	110	5,90	8,90	10,60
1702064	1742064	1712064	125	3,00	2,00	4,00	400	110	5,30	8,30	10,00
1702164	1742964	1712964	140	3,00	2,00	5,00	495	145	7,80	10,80	12,50
1703064	1743064	1713064	150	3,00	2,00	5,00	495	145	7,80	10,80	12,50
1704064	1744064	1714064	160	3,00	2,00	5,00	560	145	7,80	10,80	12,50
1705064	1745064	1715064	180	3,00	2,00	5,00	560	145	13,40	16,40	18,10
1706064	1746064	1716064	200	3,00	2,00	5,00	855	250	11,30	14,30	16,00
1707064	1747064	1717064	250	3,00	2,00	6,00	1000	250	17,70	21,10	22,50
1708064	1747364	1717364	300	4,00	3,00	6,00	1225	295	25,90	29,30	30,70
1708564	1747564	1717564	315	4,00	3,00	6,00	1315	295	27,40	30,80	32,20
1709064	1747664	1717664	350	4,00	3,00	6,00	1315	295	30,00	33,40	34,80
1709264	1747964	1717964	400	4,00	3,00	6,00	1490	345	40,00	43,40	44,80
1709364	1748064	1718064	450	4,00	3,00	6,00	1135	248	45,00	48,40	49,80
1709464	1748364	1718364	500	4,00	3,00	6,00	1205	248	50,00	53,40	54,80
1709564	1748664	1718664	550	4,00	3,00	6,00	1275	248	55,00	58,40	59,80

The item numbers stated are for branch diverters assembled using pull rings [f.b].

Branch diverters are also available for other assembly methods. See p. 7 for assembly methods.

60° trouser diverters, pressed, manual, pneumatic and electric

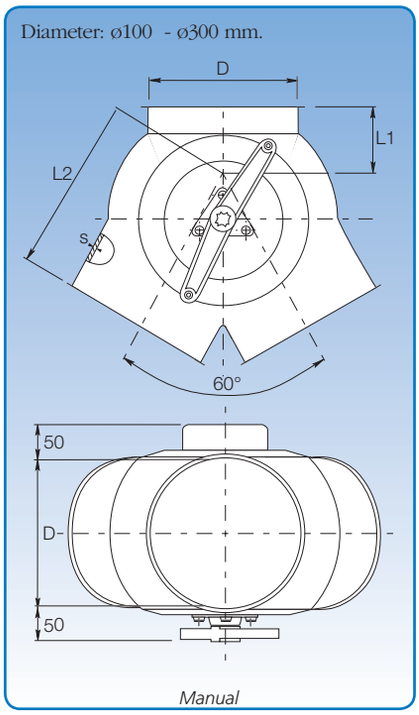

Dimensional specifications are given in the table below.

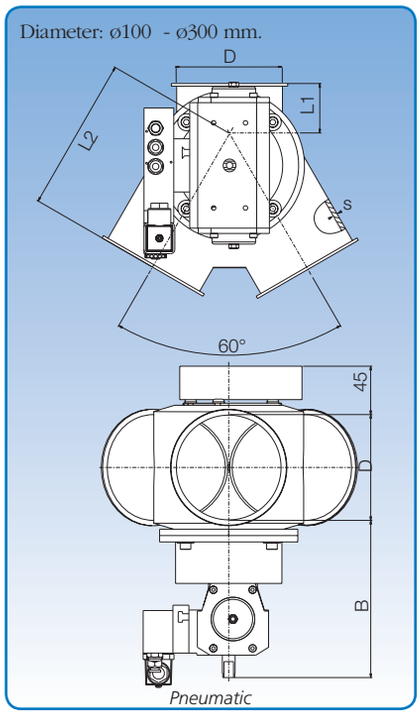

Dimensional specifications are given in the table below.

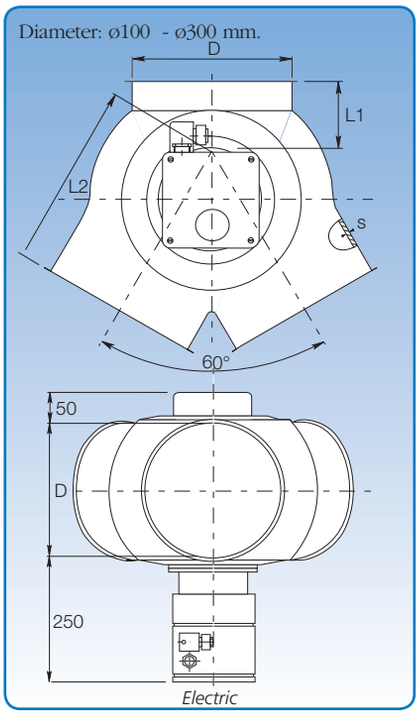

Dimensional specifications are given in the table below.

General

Trouser diverters, welded, are designed for falling and forced direction transport.
Pressed diverters are made of 1.50 - 2.00 mm sheet metal (s) with a standard 2.00 mm damper suspended on brass bearings.

With pneumatic actuator

The damper is turned by a pneumatic actuator controlled by an electrically-operated valve.
Solenoid valve: monostable 5/2 valve with 1 x 230 V AC - 50/60 Hz electric coil or 24 V DC.
Pneumatic pressure: 4-6 bar.
Valve setting indicators are available as an optional extra.

With electric actuator

The damper is operated by an electric motor activated by a changeover switch.
Power supply: 230 V AC - 50 Hz or 24 V DC.
Switch box with damper setting indicators supplied as standard.
Not supplied with profile for damper plate.

Dimensions

Item no. (Man.)	Item no. (Pneu.)	Item no. (Elec.)	D mm	s mm	B mm	L1 mm	L2 mm	Weight (Man.) kg	Weight (Pneu.) kg	Weight (Elec.) kg
1700037	1720037	1710037	100	1,50	145	70	145	2,00	5,00	6,70
1701037	1721037	1711037	120	1,50	145	160	240	4,70	7,80	9,40
1702037	1722037	1712037	125	1,50	145	90	170	3,90	6,90	8,60
1703037	1723037	1713037	150	2,00	145	100	190	5,60	8,80	10,50
1704037	1724037	1714037	160	2,00	145	95	225	5,60	8,50	10,30
1705037	1725037	1715037	180	2,00	145	195	315	10,60	13,70	15,30
1706037	1726037	1716037	200	2,00	145	110	230	7,90	10,90	12,60
1707037	1727037	1717037	250	2,00	185	135	270	12,50	15,50	17,30
1708037	1727337	1717337	300	2,00	185	160	325	18,25	21,30	23,10

The item numbers stated are for trouser diverters assembled using pull rings [f.b].
Trouser diverters are also available for other assembly methods. See p. 7 for assembly methods.

60° trouser diverters, welded, manual, pneumatic and electric

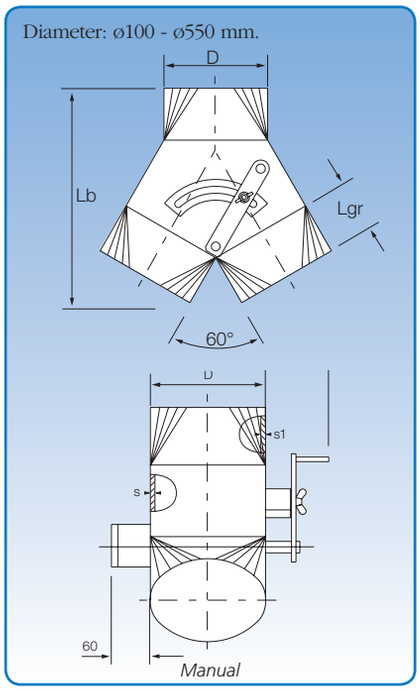

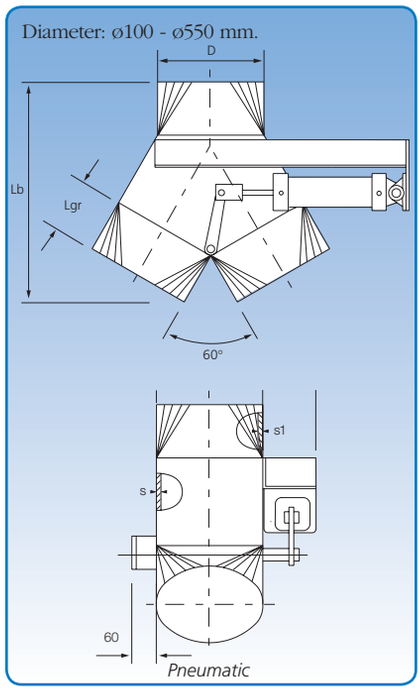

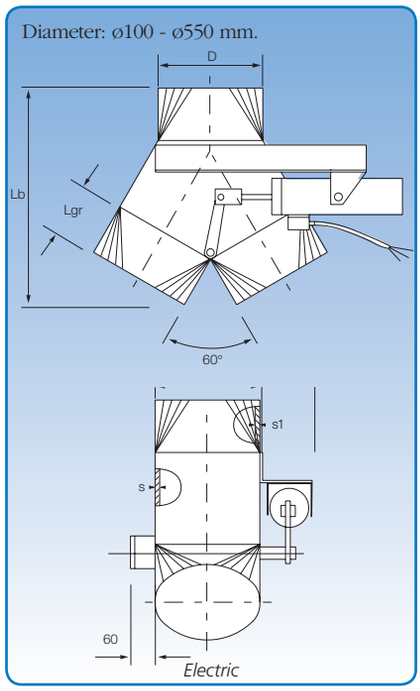

Dimensional specifications are given in the table below.

General

Trouser diverters, welded, manual, are designed for falling and pneumatic transport. Available with rubber gasket on damper plate for pneumatic transport.

With pneumatic actuator

The damper is turned by a pneumatic cylinder controlled by an electrically-operated valve. Solenoid valve: monostable 5/2 valve with 1 x 230 V AC - 50/60 Hz electric coil or 24 V DC. Pneumatic pressure: 4-6 bar. Valve setting indicators are available as an optional extra.

With electric actuator

The damper is operated by an electric motor activated by a changeover switch. Power supply: 230 V AC - 50 Hz. Switch box with damper setting indicators available as an optional extra.

Dimensions

Item no. (Man.)	Item no. (Pneu.)	Item no. (Elec.)	D mm	s mm	s1 mm	S2 mm	Lb mm	Lgr mm	Weight (Man.) kg	Weight (Pneu.) kg	Weight (Elec.) kg
1700067	1720067	1710067	100	3,00	2,00	4,00	305	105	2,00	6,70	6,70
1701067	1721067	1711067	120	3,00	2,00	4,00	330	110	4,70	7,80	9,40
1702067	1722067	1712067	125	3,00	2,00	4,00	330	110	3,90	6,90	8,60
1702167	1722967	1712967	140	3,00	2,00	5,00	455	145	5,80	10,50	10,50
1703067	1723067	1713067	150	3,00	2,00	5,00	455	145	5,80	8,80	10,50
1704067	1724067	1714067	160	3,00	2,00	5,00	455	145	5,60	9,00	10,30
1705067	1725067	1715067	180	3,00	2,00	5,00	525	145	10,60	13,70	15,30
1706067	1726067	1716067	200	3,00	2,00	5,00	525	145	11,30	10,90	12,60
1706967	1746967	1716967	225	3,00	2,00	5,00	820	250	12,50	12,60	23,10
1707067	1727067	1717067	250	3,00	2,00	5,00	820	250	12,50	15,90	17,30
1707267	1727267	1717267	275	3,00	2,00	5,00	900	250	18,30	21,70	23,10
1708067	1727367	1717367	300	3,00	2,00	5,00	900	250	18,30	21,70	23,10
1708567	1747567	1717567	315	3,00	2,00	6,00	880	250	19,60	22,00	24,40
1709067	1727667	1717667	350	3,00	2,00	6,00	880	250	24,00	27,40	28,80
1709267	1727967	1717967	400	3,00	2,00	6,00	930	295	37,00	37,00	36,80
1709367	1728067	1718067	450	4,00	3,00	6,00	965	295	37,00	40,00	41,80
1709467	1728367	1718367	500	4,00	3,00	6,00	1040	295	42,00	45,00	46,80
1709567	1728667	1718667	550	4,00	3,00	6,00	1170	345	48,00	51,00	52,80

False air valves, galvanised

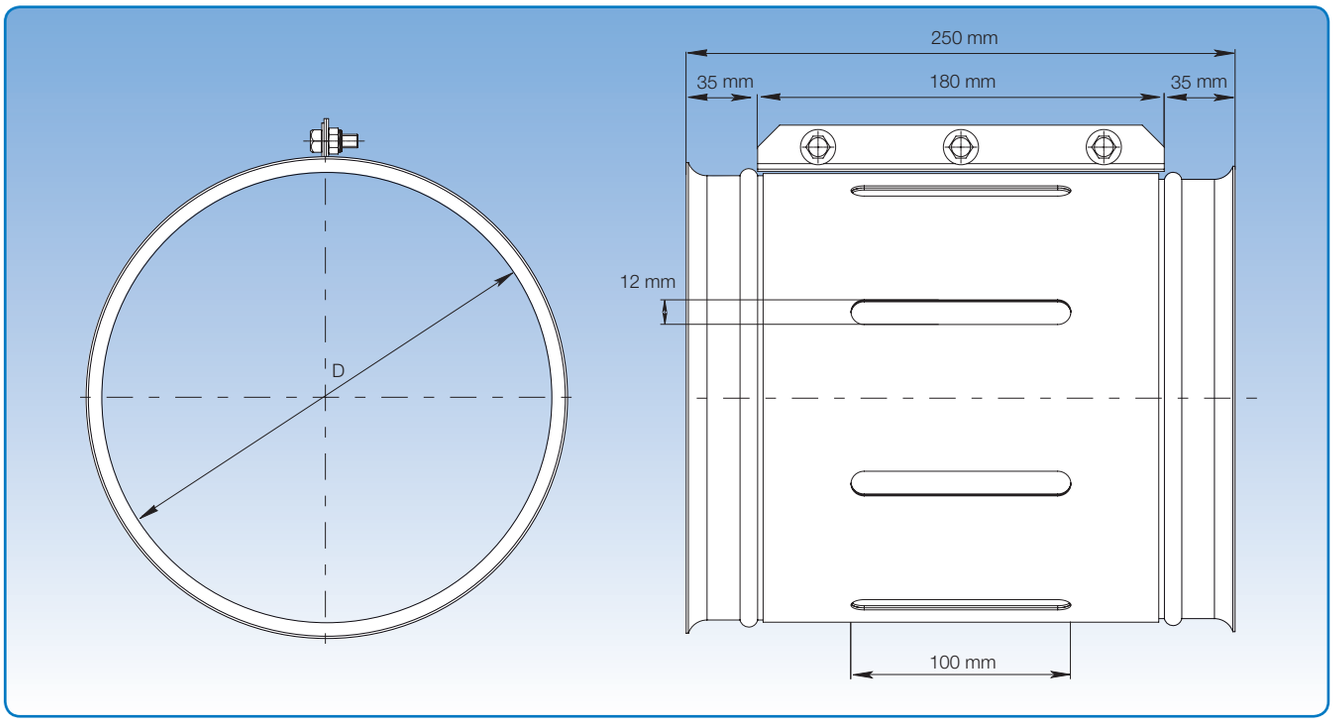

Diameter: ø80 – ø400 mm.

Made of 0.90 mm sheet metal.

"False" air is regulated by turning the external button.

Item no.	Dimensions D mm	Weight kg
4670906	80	0,95
4671906	100	1,60
4672906	120	0,90
4673906	125	0,95
4674906	140	1,65
4675906	150	1,25
4676906	160	1,95
4677906	180	2,20
4678906	200	2,45
4679906	225	2,80
4680906	250	3,15
4681906	275	3,50
4682906	300	3,85
4683906	315	4,30
4684906	350	4,78
4685906	400	5,60

The item numbers stated are for false air valves assembled using pull rings [f.b].

False air valves are also available for other assembly methods. See p. 6 for assembly methods.

Membrane valves

Membrane valves consist of a metal cap made of 0.90 mm sheet metal with a duct-shaped rubber membrane inside with full opening area. The membrane is reinforced with Kevlar fibre.
Two guide rails ensure the membrane closes in two wings, meeting in the middle to form a seal. The membrane is made of natural rubber, which is extremely resistant to abrasive materials and oils.

The valve opens and closes by blowing and extracting compressed air into the rubber membrane.

Membrane valves can be used in systems with underpressure down to approx. 3.000 Pa, and air velocity of up to 30 m/sec.

Membrane valves can be supplied with on/off control using a single magnetic valve or regulation of flow and pressure using a double magnetic valve with two coils.

Electrical connection: 230 V AC - 50/60 Hz or 24 V DC.
The rubber membrane is also available in EPDM rubber.

Diameter: ø100 - ø400 mm.

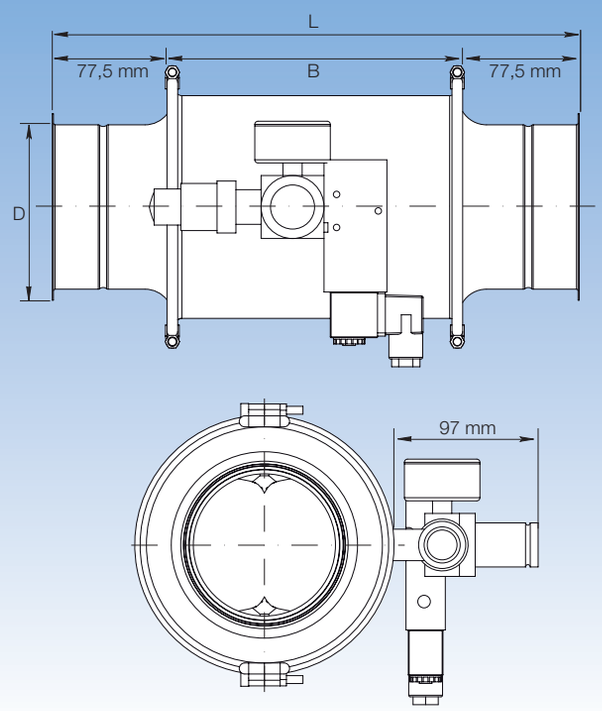

Dimensions				
Item no.	D mm	B mm	L mm	Weight kg
1500100	100	180	335	3,90
1500120	120	200	355	10,86
1500150	150	230	380	14,27
1500200	200	285	440	21,40
1500250	250	335	490	30,00
1500300	300	385	540	45,29
1500350	350	425	580	60,53
1500400	400	475	630	71,75

The item numbers stated are for membrane valves assembled using pull rings [f.b].
Membrane valves are also available for other assembly methods. See p. 6 for assembly methods.

Pull rings, galvanised

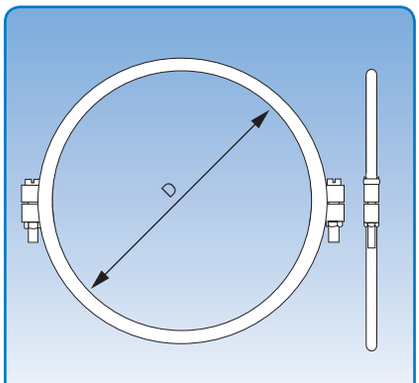

Pull rings, galvanised

Diameter: ø80 - ø500 mm.
Galvanised pull rings [f.b] are in two pieces.
Pull rings are electro-galvanised.
EPDM rubber rings are available as optional extras for sealing ø80 - ø300 mm diameter assemblies.

They are supplied in plastic bags of 10, along with the necessary nuts and bolts.

Pull rings, galv.		
Item no.	D mm	10 pcs. Weight kg
1670011	80	0,55
1671011	100	0,60
1672011	120	0,65
1673011	125	0,70
1674011	140	0,75
1675011	150	0,80
1676011	160	0,83
1677011	180	0,85
1678011	200	0,90
1679011	225	0,95
1680011	250	1,00
1680511	275	1,05
1681011	300	1,25
1682011	315	1,30
1682611	325	1,30
1683011	350	1,35
1684011	400	1,45
1684711	425	1,50
1685011	450	1,65
1686011	500	1,90

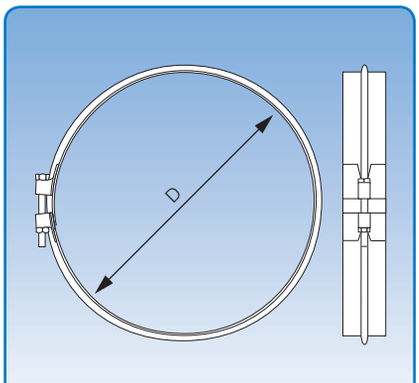

Pull rings, wide, galvanised

Diameter: ø150 - ø800 mm.
Wide galvanised pull rings [f.bb] are made from hot dip galvanised sheet metal.

These rings are supplied individually with nuts and bolts.

Pull rings, wide, galvanised.		
Item no.	D mm	Pce. Weight kg
1675001	150	0,22
1676001	160	0,23
1677001	180	0,24
1678001	200	0,25
1679001	225	0,30
1680001	250	0,35
1680501	275	0,40
1681001	300	0,45
1682001	315	0,47
1682601	325	0,49
1683001	350	0,50
1683701	375	0,52
1684001	400	0,55
1684701	425	0,55
1685001	450	0,60
1685901	475	0,60
1686001	500	0,65
1686501	525	0,67
1687001	550	0,70
1688001	600	0,75
1689001	630	0,78
1690001	650	0,80
1691001	700	0,86
1692001	750	0,90
1693001	800	0,98

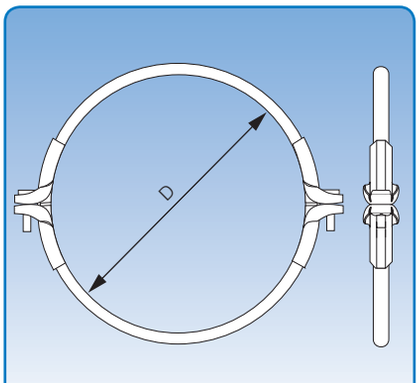

Pull rings, galvanised for 2 and 3 mm.

Diameter: ø80 - ø600 mm.
Galvanised pull rings [f.b] are in two pieces.
Pull rings are electro-galvanised.

Insert with sealing compound

JKF supplies pull rings with sealing compound inserted, made of Terostat VII material. The insert has a protective plastic film which must be removed before the pull ring can be used. The sealing compound is not soluble. Working temperature range is -50°C to +100°C. The rings are supplied in plastic bags of 10, along with the necessary nuts and bolts.

Pull rings, 2 and 3 mm, galv.		
Item no.	D mm	10 pcs. Weight kg
Rubber ring insert (EPDM)		
1670021	80	1,76
1671021	100	1,87
1672021	120	2,04
1673021	125	2,21
1674021	140	2,25
1675021	150	2,38
1676021	160	2,55
1677021	180	2,72
1678021	200	2,83
1679021	225	3,20
1680021	250	3,40
1680521	275	3,45
1681021	300	3,57
Insert with sealing compound		
1682021	315	4,25
1683021	350	4,42
1684021	400	4,93
1685021	450	5,61
1686021	500	6,46
1687021	550	7,14
1688021	600	8,50

Rubber gasket rings

Diameter: ø80 - ø300 mm.

Standard rubber gasket rings are made of EPDM 80 rubber and used for f.b. assemblies to improve degree of tightness.

One ring is fitted for each assembly.
Rings are fitted on either f.b. edge before assembly.

Rubber gasket rings are U-shaped in cross section.
Hardness is 80 shore, and working temperature range is -40°C to +100°C.

Same dimensions are available in NITRIL rubber.
Hardness is 80 shore, and working temperature range is -15°C to +80°C.
NITRIL rubber is resistant to oil and petrol, and to some degree to acids and bases.

Supplied in plastic bags of 10 pcs.

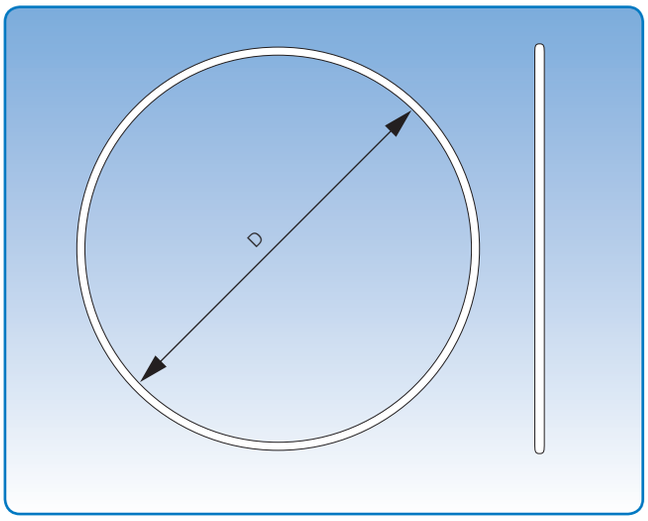

Dimensional specifications are given in the table below.

Dimensions		
Item no.	D mm	Weight/10 pcs. kg
820170080	80	0,20
820170100	100	0,30
820170120	120	0,50
820170125	125	0,50
820170140	140	0,60
820170150	150	0,60
820170160	160	0,70
820170180	180	0,70
820170200	200	0,80
820170225	225	1,10
820170250	250	1,12
820170275	275	1,12
820170300	300	1,30

Rapid lock pull rings, galvanised

Rapis lock pull rings [f.lyn] are electro-galvanised and used for fast, tight assembly of duct systems.

Fitted with an insert which provides a dust-resistant join and provides stability to the duct system, ensuring electrical conductivity through the assembly.

2 and 3 mm duct systems are fitted with a rapid lock pull ring with an insert which facilitates a larger size.

A silicon insert is required for temperatures above 80°C, which can tolerate temperatures up to 275°C.

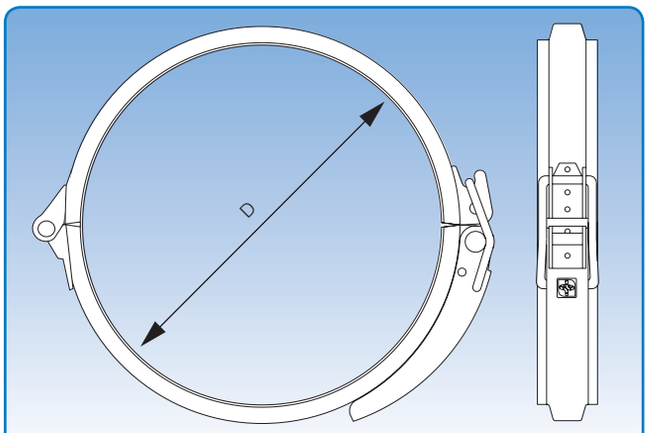

Rapid lock pull rings with hinge and handle, galvanised.

Diameter: ø80 - ø425 mm.

Handle is extended and made of a strong material for hand operation of rapid lock pull rings.

The powerful steel spring ensures high quality opening/closing mechanism and long service life.
Supplied individually.

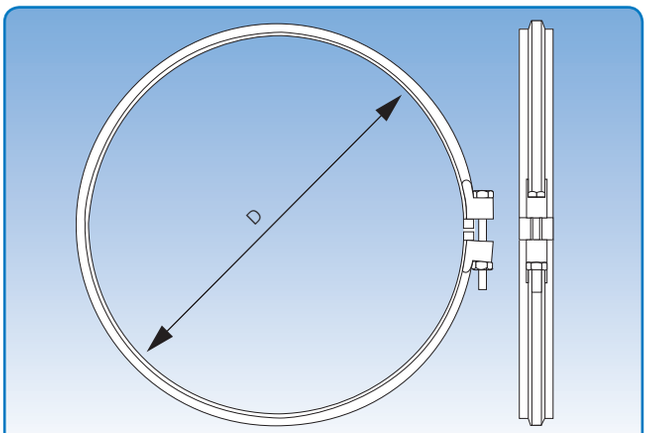

Rapid lock pull rings with bolt, galvanised.

Diameter: ø450 – ø600 mm

Supplied individually with nuts and bolts.

Rapid lock pull rings with hinge and handle, galvanised.

Item no.	D mm	Weight kg
1670012	80	1,90
1671012	100	2,10
1672012	120	2,30
1673012	125	2,40
1674012	140	2,50
1675012	150	2,60
1676012	160	2,80
1677012	180	3,00
1678012	200	3,20
1679012	225	3,40
1680012	250	3,70
1680512	275	3,90
1681012	300	4,20

Item no.	D mm	Weight kg
1682012	315	4,40
1682612	325	4,50
1683012	350	4,80
1683612	355	4,80
1683712	375	5,10
1684012	400	5,30
1684712	425	5,60
Rapid lock pull rings with bolt, galvanised.		
1685012	450	5,80
1685912	475	6,10
1686012	500	6,30
1687012	550	6,80
1688012	600	7,30

Flanges

Diameter: ø80 - ø1250 mm.
Flanges are made in accordance with JKF's standard, and are a standard component in the product range.

Flanges are stock items in hot dip galvanised finish, but can be supplied either untreated or painted.

Flanges in other dimensions or profiles are available to order.

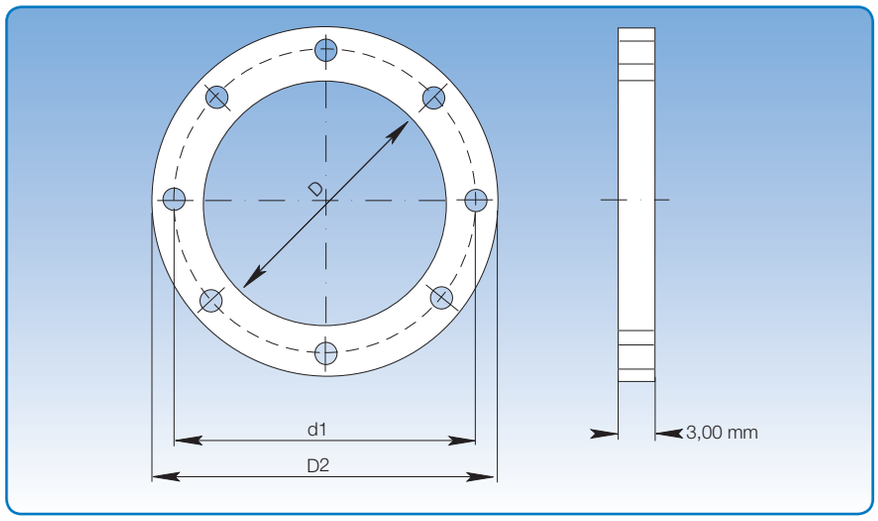

Dimensional specifications are given in the table below.

		Dimensions							
Item no.	Diameter: nominal	D mm	d1 mm	D2 mm	s mm	Flange width mm	Hole size mm	Quant. holes	Weight kg
1670005	80	83	115	133	3,00	25	9	8	0,26
1671005	100	103	135	153	3,00	25	9	8	0,31
1672005	120	123	155	173	3,00	25	9	8	0,36
1673005	125	128	160	178	3,00	25	9	8	0,38
1674005	140	143	175	193	3,00	25	9	8	0,41
1675005	150	155	185	205	5,00	25	9	8	0,55
1676005	160	165	195	215	5,00	25	9	8	0,58
1677005	180	185	215	235	5,00	25	9	8	0,64
1678005	200	205	235	255	5,00	25	9	12	0,70
1679005	225	230	260	280	5,00	25	9	12	0,75
1680005	250	255	285	305	5,00	25	9	12	0,85
1680505	275	280	310	330	5,00	25	9	12	0,96
1681005	300	305	336	355	5,00	25	9	12	1,01
1682005	315	320	351	370	5,00	25	9	12	1,26
1683505	325	330	360	380	5,00	25	9	12	1,38
1683005	350	355	389	415	6,00	26	11	12	1,64
1684505	375	380	424	440	6,00	30	11	12	1,77
1684005	400	405	439	465	6,00	30	11	16	1,85
1685505	425	430	462	490	6,00	30	11	16	1,96
1685005	450	455	389	515	6,00	30	11	16	2,04
1686505	475	480	515	540	6,00	30	11	16	2,18
1686005	500	505	540	565	6,00	30	11	16	2,30
1687005	550	555	590	615	6,00	30	11	16	2,50
1688005	600	605	640	665	6,00	30	11	16	2,80
1689005	630	635	670	695	6,00	30	11	24	2,90
1690005	650	655	690	715	6,00	30	11	24	3,00
1691005	700	705	750	785	6,00	40	11	24	4,30
1692005	750	755	800	835	6,00	40	11	24	4,50
1693005	800	805	850	885	6,00	40	11	24	4,90
1694005	850	855	900	935	6,00	40	11	24	5,20
1695005	900	905	950	985	6,00	40	11	24	5,50
1696005	950	955	1000	1035	6,00	40	11	24	5,80
1697005	1000	1005	1050	1085	6,00	40	11	24	6,00
1698005	1250	1255	1300	1335	6,00	40	11	28	7,50

Rubber flanges

Diameter: ø80 - ø1250 mm.

Rubber flanges are made of NITRIL rubber, adapted to JKF's standard flange range.

Hardness: 65 shore.
Temperature range: -10°C to +70°C.
Resistant to oil and petrol and to a limited extent acid and base chemicals.

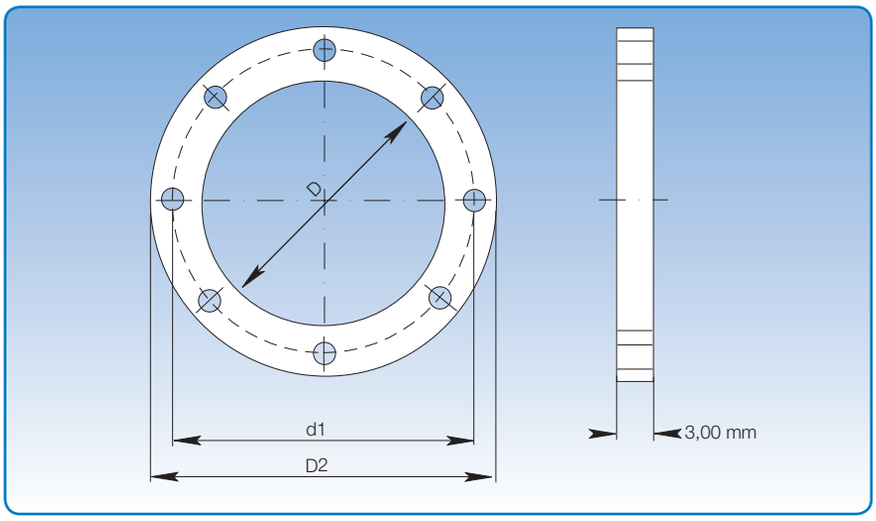

Dimensional specifications are given in the table below.

	Dimensions							
Item no.	Diameter nominal	D mm	d1 mm	D2 mm	Flange width mm	Hole size mm	Quant. holes	Weight kg
820150080	80	83	115	133	25	8	8	0,02
820150100	100	103	135	153	25	8	8	0,03
820150120	120	123	155	173	25	8	8	0,04
820150125	125	128	160	178	25	8	8	0,05
820150140	140	143	175	193	25	8	8	0,05
820150150	150	155	185	205	25	8	8	0,06
820150160	160	165	195	215	25	8	8	0,06
820150180	180	185	215	235	25	8	8	0,07
820150200	200	205	235	255	25	8	12	0,08
820150225	225	230	260	280	25	8	12	0,09
820150250	250	255	285	305	25	8	12	0,10
820150275	275	280	310	330	25	8	12	0,10
820150300	300	305	336	355	25	8	12	0,11
820150315	315	320	351	370	25	8	12	0,13
820150350	350	355	389	415	26	10	12	0,15
820150400	400	405	439	465	30	10	16	0,18
820150450	450	455	389	515	30	10	16	0,21
820150500	500	505	540	565	30	10	16	0,22
820150550	550	555	590	615	30	10	16	0,25
820150600	600	605	640	665	30	10	16	0,29
820150630	630	635	670	695	30	10	24	0,33
820150650	650	655	690	715	30	10	24	0,35
820150700	700	705	750	785	40	10	24	0,38
820150750	750	755	800	835	40	10	24	0,41
820150800	800	805	850	885	40	10	24	0,49
820150850	850	855	900	935	40	10	24	0,52
820150900	900	905	950	985	40	10	24	0,54
820150950	950	955	1000	1035	40	10	24	0,55
820151000	1000	1005	1050	1085	40	10	24	0,56
820151100	1100	1105	1150	1185	40	10	24	0,59
820151200	1200	1205	1250	1285	40	10	24	0,61
820151250	1250	1255	1300	1335	40	10	28	0,62

Jet caps, galvanised

Diameter: ø120 - ø1000 mm.

Supplied with the same JKF assembly methods as duct systems.

Jet caps from diameter ø700 - ø1000 mm are fitted with flanges as standard.

Jet caps are fitted with an internal cone and drain hose for disposal of water.

See next page for pressure loss curves.

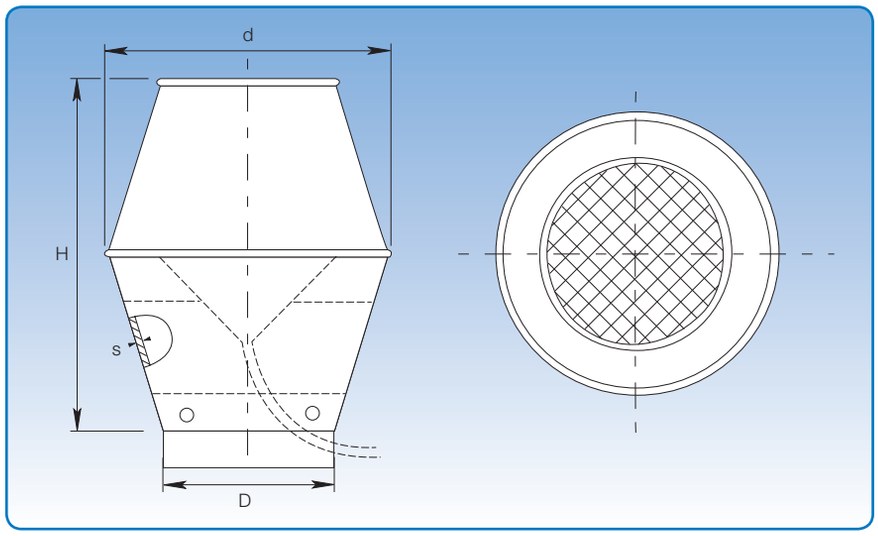

Dimensional specifications are given in the table below.

Dimensions

Item no.	D mm	d mm	s mm	H mm	Weight kg
1902202	120	185	0,75	325	3,00
1903202	125	195	0,75	340	3,50
1904202	140	215	0,75	365	3,80
1905202	150	230	0,90	390	4,00
1906202	160	245	0,90	410	5,00
1907202	180	275	0,90	445	5,40
1908202	200	305	0,90	490	4,00
1909202	225	345	0,90	535	4,80
1910202	250	380	0,90	590	5,70
1912202	275	420	0,90	640	9,00
1913202	300	460	0,90	690	8,00
1914202	315	480	0,90	720	8,70
1915202	350	535	0,90	785	10,70
1916202	400	610	0,90	885	13,50
1917202	450	690	0,90	985	16,70
1918202	500	765	0,90	1095	21,00
1919202	550	840	0,90	1200	28,00
1920202	600	915	0,90	1300	36,00
1921202	630	960	0,90	1360	40,00
1922202	650	990	0,90	1390	42,00
1923202	700	1070	1,25	1505	49,00
1924202	750	1145	1,25	1595	56,00
1925202	800	1220	1,25	1695	68,00
1926202	850	1295	1,25	1795	80,00
1927202	900	1375	1,25	1900	100,00
1928202	950	1450	1,25	1975	105,60
1929202	1000	1525	1,25	2000	150,00

Item numbers designated with D ≤ 650 mm are for jet caps assembled with wide pull rings [f.lyn].
Jet caps are also available for other assembly methods. See p. 6 for assembly methods.

Jet caps, galvanised
Technical data

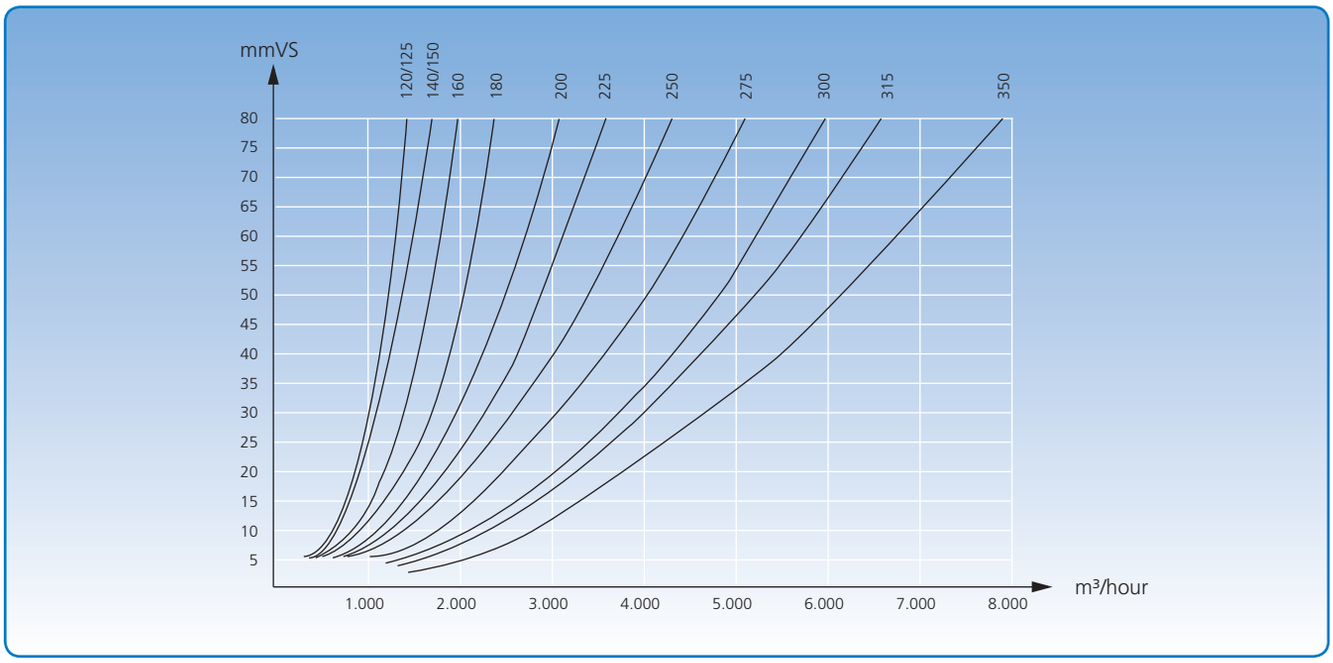

Pressure loss curves for diameter ø120 - ø350 mm.

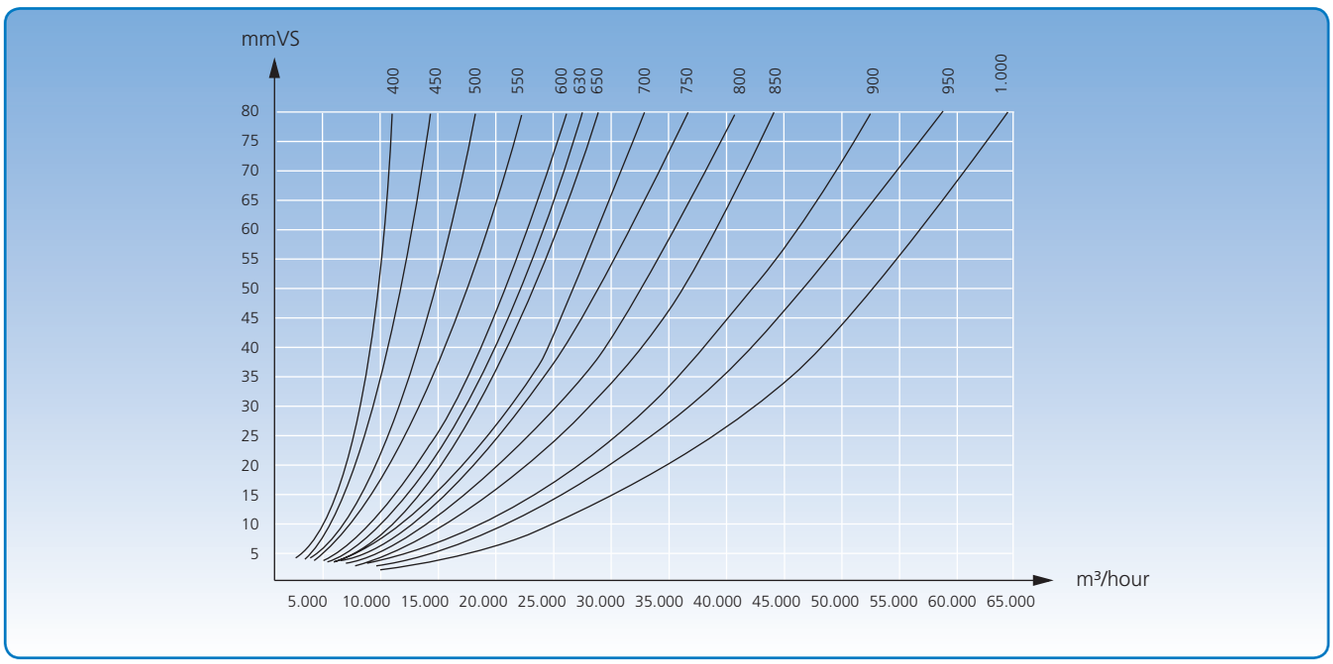

Pressure loss curves for diameter ø400 - ø1000 mm.

Rain caps, galvanised

Diameter: ø80 - ø1250 mm.

Supplied with the same JKF assembly methods as duct systems.

Rain caps from diameter ø700 - ø1000 mm are fitted with flanges as standard.

Rain caps of diameter ø80 - ø225 mm are supplied with a skirt and from ø250 - ø1000 mm with skirt and internal cone.

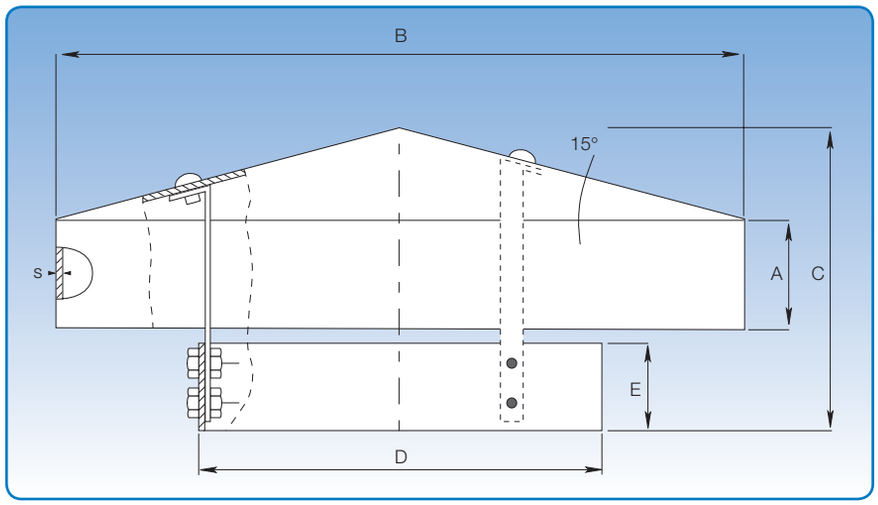

Dimensional specifications are given in the table below.

Dimensions

Item no.	D mm	s mm	B mm	C mm	A mm	E mm	Weight kg
1970122	80	0,90	200	130	50	75	1,30
1971122	100	0,90	200	130	50	75	1,35
1972122	120	0,90	250	150	50	75	1,40
1973122	125	0,90	250	150	50	75	1,50
1974122	140	0,90	350	190	50	100	1,90
1975122	150	0,90	350	190	50	100	2,20
1976122	160	0,90	350	190	50	100	2,40
1977122	180	0,90	400	220	50	100	2,66
1978122	200	0,90	400	220	50	100	4,00
1979122	225	0,90	500	240	50	100	5,30
1980122	250	0,90	500	240	50	100	5,90
1980162	275	0,90	500	240	50	100	6,00
1981122	300	0,90	650	340	100	150	6,10
1982122	315	0,90	650	340	100	150	6,12
1983122	350	0,90	650	340	100	150	6,14
1984122	400	0,90	750	371	100	150	6,30
1985122	450	0,90	750	370	100	150	7,00
1986122	500	0,90	950	440	150	150	9,70
1987122	550	0,90	950	440	150	150	9,70
1988122	600	0,90	1050	480	150	150	12,00
1989122	630	0,90	1050	480	150	150	10,40
1990122	650	0,90	1050	480	150	150	11,00
1991122	700	0,90	1200	570	200	200	19,20
1992122	750	0,90	1200	570	200	200	20,90
1993122	800	1,25	1400	610	200	200	22,30
1994122	850	1,25	1400	610	200	200	26,90
1995122	900	1,25	1550	680	250	200	29,70
1996122	950	1,25	1550	680	250	200	31,35
1997122	1000	1,25	1700	720	250	200	34,50
1998122	1100	1,25	1850	745	250	200	38,00
1999122	1250	1,25	2000	765	250	200	43,20

The item numbers stated are for rain caps assembled using wide pull rings [f.lyn]. Rain caps are also available for other assembly methods. See p. 6 for assembly methods.

Clip bands, galvanised

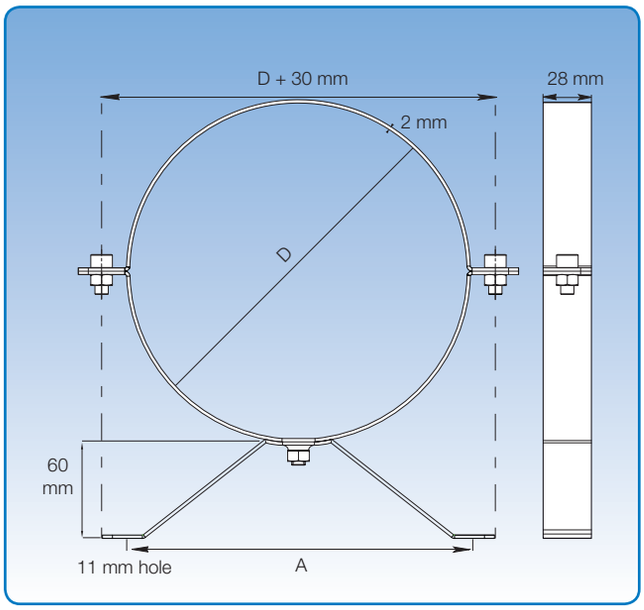

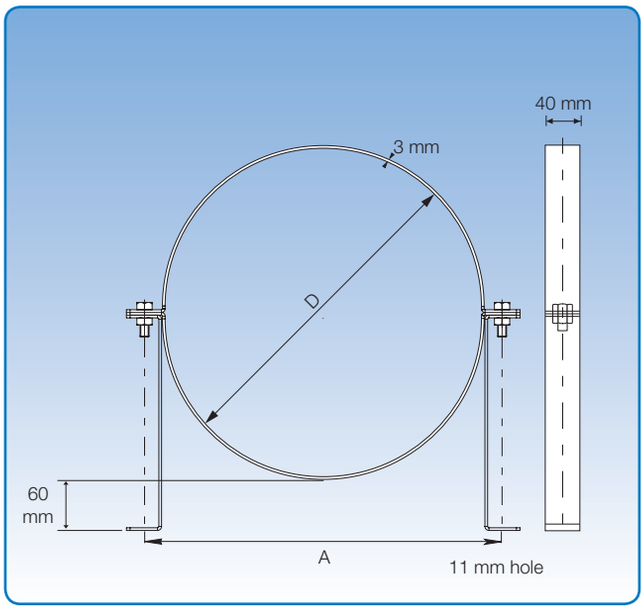

Diameter: ø80 - ø315 mm.

Supplied for mounting JKF duct systems. 3 different mounting principles: with legs, wall mounted and hanging.

Recommended distance between bands: 1 band to every other assembly.

Diameter: ø350 - ø800 mm.

Supplied for mounting JKF duct systems. 3 different mounting principles: with legs, wall mounted and hanging.

Recommended distance between bands: 1 band to every other assembly.

s = 2 mm			
Item no.	D mm	A mm	Weight kg
4640290	80	132	0,27
4641290	100	132	0,29
4642290	120	132	0,32
4643290	125	132	0,33
4644290	140	132	0,35
4645290	150	132	0,36
4646290	160	132	0,38
4647290	180	210	0,43
4648290	200	210	0,46
4649290	225	210	0,50
4650290	250	210	0,53
4650390	275	210	0,57
4651290	300	210	0,60
4652290	315	210	0,62

s = 3 mm			
Item no.	D mm	A mm	Weight kg
4653290	350	240	1,66
4683290	375	426	1,71
4654290	400	451	1,83
4684290	425	476	1,91
4655290	450	501	2,01
4685290	475	526	2,08
4656290	500	551	2,27
4657290	550	601	2,33
4658290	600	651	2,42
4658330	630	681	2,51
4658390	650	701	3,64
4659290	700	761	3,88
4659390	750	811	4,09
4659490	800	861	4,31

Clip bands, primed, heavy design

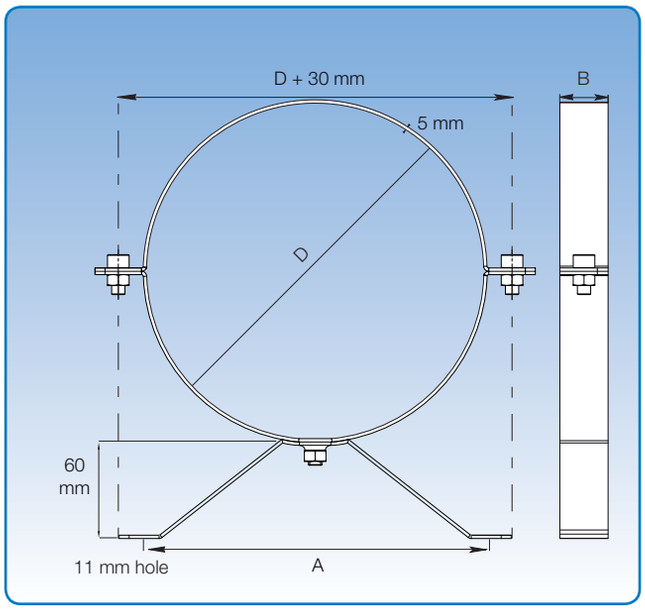

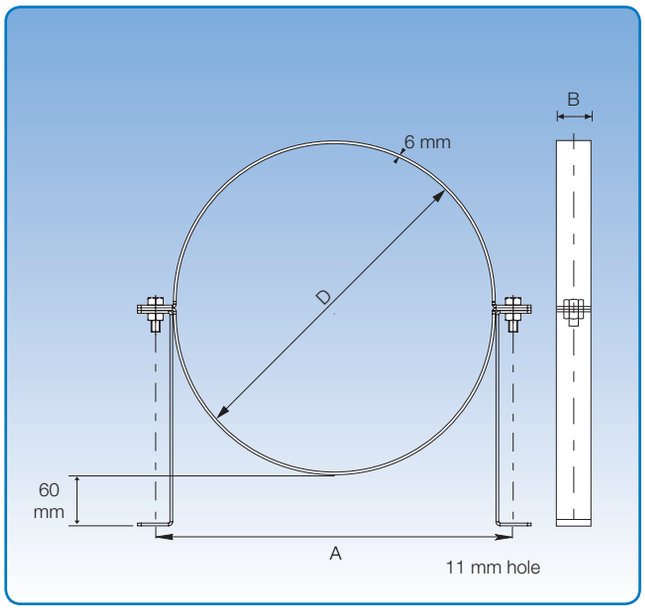

Diameter: ø80 - ø315 mm.

Supplied for mounting JKF duct systems. Can be used for 3 different mounting principles.

Recommended distance between bands: 1 band to every other assembly.

Diameter: ø350 - ø1000 mm.

Supplied for mounting JKF duct systems. Can be used for 3 different mounting principles.

Recommended distance between bands: 1 band to every other assembly.

s = 5 mm				
Item no.	D mm	B mm	A mm	Weight kg
4621080	80	25	120	0,58
4621100	100	25	120	0,64
4621120	120	25	120	0,70
4621125	125	25	120	0,72
4621140	140	25	120	0,77
4621150	150	25	120	0,79
4621160	160	25	120	0,82
4621180	180	25	120	0,94
4621200	200	25	240	1,00
4621225	225	25	240	1,08
4621250	250	25	240	1,16
4621275	275	25	240	1,23
4621300	300	25	240	1,31
4621315	315	25	240	1,35

s = 6 mm				
Item no.	D mm	B mm	A mm	Weight kg
4623280	350	30	401	2,60
4624280	400	30	451	2,89
4625280	450	30	501	3,18
4626280	500	30	551	3,49
4627280	550	30	601	3,77
4628280	600	30	651	4,06
4629280	630	30	681	4,21
4630280	650	30	701	4,36
4631280	700	40	761	6,33
4632280	750	40	811	6,74
4633280	800	40	861	7,11
4634280	850	40	911	7,50
4635280	900	40	961	7,89
4636280	950	40	1011	8,30
4637280	1000	40	1061	8,69

Cutting screens, galvanised

Diameter: ø100 - ø150 mm.

JKF's standard range includes cutting screens made of 0.90 mm galvanised sheet metal (s).

Screens supplied with mounting magnets.

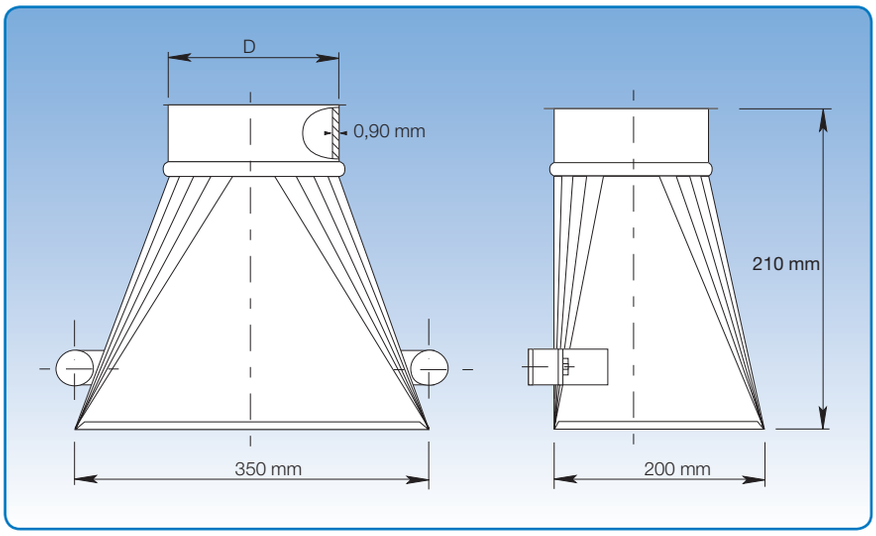

Dimensional specifications are given in the table below.

Dimensions		
Item no.	D mm	Weight kg
4671601	100	1,50
4671602	120	1,75
4671603	125	1,89
4671604	140	2,00
4671605	150	2,25

The item numbers stated are for cutting screens assembled using rapid lock pull rings [f.lyn].

Sweep ups, galvanised

Diameter: ø100 - ø200 mm.

Sweep ups for suction of floor areas are made of 0.90 mm galvanised sheet metal.

Sweep ups are fitted with grill and no gate as standard. Can be supplied with both.

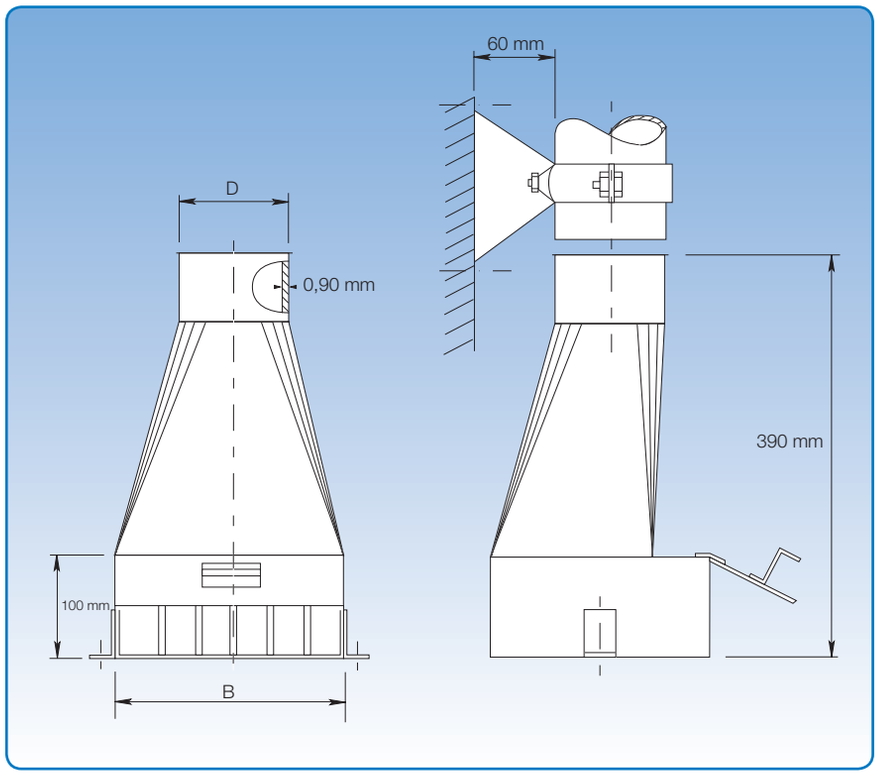

Dimensional specifications are given in the table below.

Item no.	Dimensions D mm	B mm	Weight kg
4671501	100	220	3,53
4672501	120	220	3,77
4673501	125	220	3,77
4674501	140	220	3,79
4675501	150	285	3,81
4676501	160	285	3,88
4677501	180	285	4,58
4678501	200	285	4,80

The item numbers stated are for sweep ups assembled using rapid lock pull rings [f.lyn].

Sputniks, galvanised

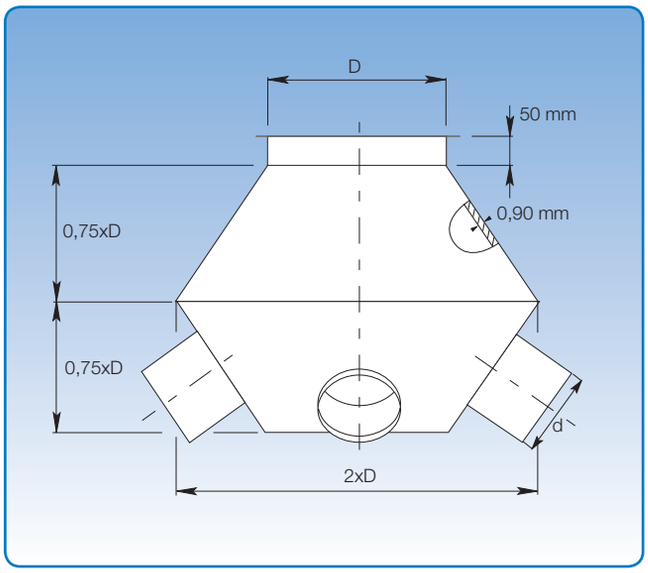

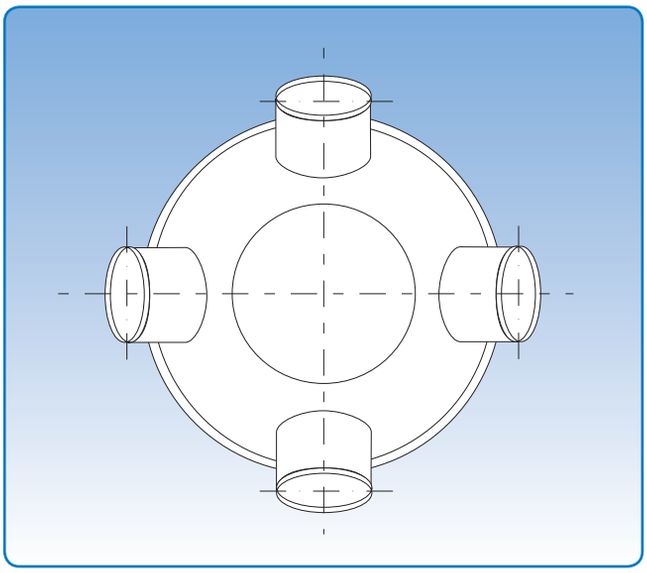

Dimensional specifications are given in the table below.

Diameter: ø80 - ø500 mm.

Sputniks are made of 0.90 mm galvanised sheet metal (s).

Sputniks are for use where several suction intakes are merged into a single duct.

Sputniks are available with 2 - 9 suction spigots.

State D and d and number of suction spigots plus assembly method when ordering.

Dimensions

D mm	Weight kg
80	1,28
100	1,60
120	2,00
125	2,60
150	3,27
160	4,09
180	5,12
200	6,40
250	8,00
300	10,00
315	12,00
350	14,50
400	17,40
450	21,00
500	25,00

Purflex hoses

Diameter: ø50 - ø400 mm.

Purflex hoses are ideal for use in the chemical and petrochemical industries, for gases, cement dust, granulates, abrasive powders, shavings etc.

Purflex hoses are very hard-wearing and made of 100% polyurethane in a single film layer with welded-in, corrosion protected steel spiral.

Temperature range tolerance from -30°C to +80°C.

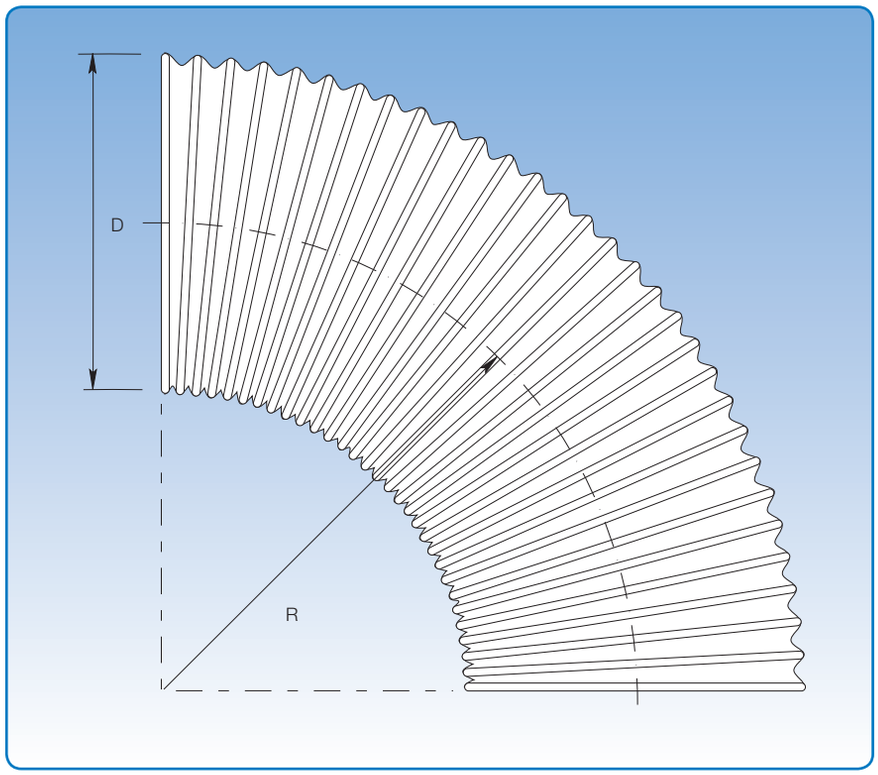

Dimensional specifications are given in the table below.

Dimensions			
Item no.	**D mm**	**R mm**	**Weight kg / m**
8364050	50	160	0,85
8364060	60	180	0,90
8364063	63	200	1,00
8364065	65	250	1,00
8364070	70	300	1,00
8364080	80	318	1,30
8364090	90	350	1,60
8364100	100	380	1,70
8364120	120	400	1,90
8364125	125	450	1,90
8364130	130	500	2,00
8364140	140	500	2,10
8364150	150	500	2,40
8364160	160	500	2,70
8364180	180	500	2,90
8364200	200	550	3,00
8364225	225	550	3,20
8364250	250	550	3,40
8364275	275	550	3,60
8364300	300	550	3,80
8364315	315	550	3,90
8364350	350	550	4,00
8364400	400	600	4,50

Sanding tables, galvanised

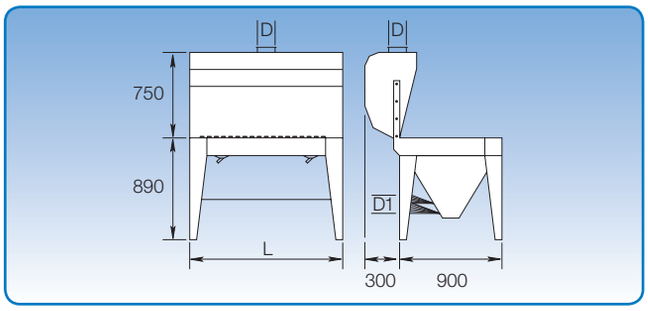

Sanding tables are designed to give the operator optimum working conditions. This applies to ergonomic and environmental conditions.

A special "Coanda" effect is used, which keeps the operator's respiratory system free of airborne dust.

Air volume can be adjusted in models with a louvre gate in the top.

Sanding tables are made of galvanised sheet metal.

2 different sizes are available as standard.
Dimension 900 mm.
Dimension 1350 mm.

Leg height is not adjustable. Fixed legs can be ordered for a specified table height.

Dimension 900:
Supplied as standard with no louvre gate but with upper screen.

At an additional price:
Special model with louvre gate and upper screen.
Special model with no louvre gate and upper screen.
Special model with louvre gate and no upper screen.

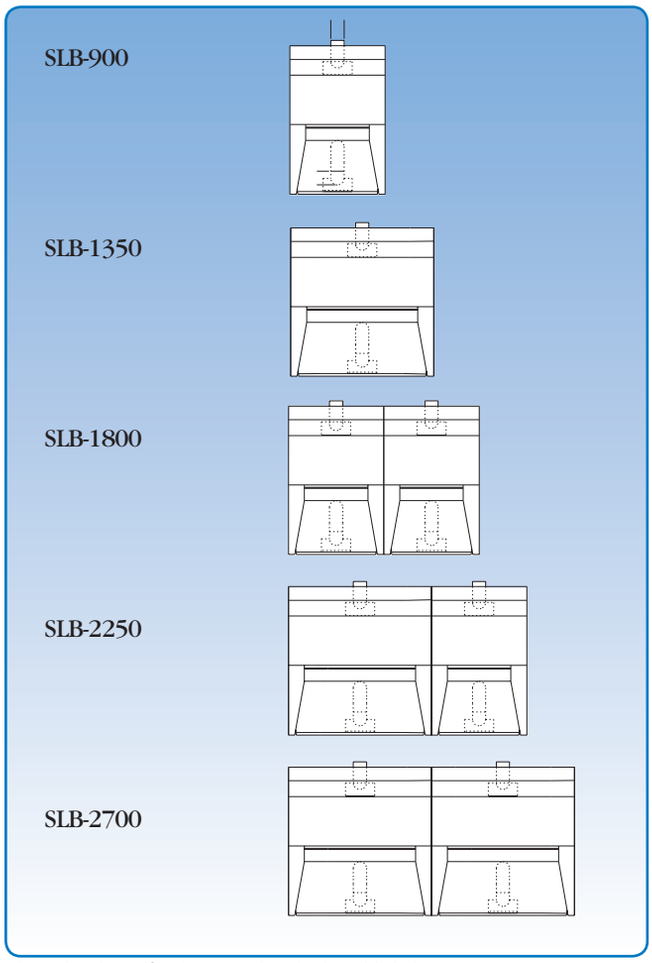

Dimensional specifications are given in the table below.

Dimension 1350:
Supplied as standard with no louvre gate but with upper screen.

At an additional price:
Special model with louvre gate and upper screen.
Special model with no louvre gate and upper screen.
Special model with louvre gate and no upper screen.

Dimensions

Type	L mm	D mm	D1 mm	Primary suction m^3 / h	Suction below table m^3 / h	Weight kg
SLB-900	900	125	125	1200	1200	79
SLB-1350	1350	160	150	1800	1200	96
SLB-1800	1800	2 x 125	2 x 125	2400	2400	160
SLB-2250	2250	160 and 125	150 and 125	3000	2400	176
SLB-2700	2700	2 x 160	2 x 150	3600	2400	195

Appendix 1

Conclusions from test report

JKF's duct system has been tested to establish its strength. System stability has been established by performing an internal water pressure test. The test was performed by JKF under the auspices of the Danish Technological Institute (material test).

Resistance up to overpressure of 9 bar

Ducts and assemblies 2 and 3 mm thickness with welded flanges and flat gaskets up to a diameter of 600 mm.
Ducts up to L = 2000 mm
Galvanised ducts and assemblies 0.9 mm thickness with loose flanges and flat gaskets up to a diameter of 400 mm.
Ducts up to L = 2000 mm

Resistance up to overpressure of 6 bar

Ducts and assemblies 2 and 3 mm thickness with welded flanges and flat gaskets of diameter 600 mm up to 800 mm.
Ducts up to L = 2000 mm

Resistance up to overpressure of 3 bar

Galvanised ducts and assemblies 0.75 mm thickness with 1 pull ring and U-shaped gasket or rapid lock pull rings with U-shaped gasket up to a diameter of 200 mm.
Ducts up to L = 2000 mm
Bends 30° up to 90°

Resistance up to overpressure of 1.5 bar

Galvanised ducts and assemblies 0.9 mm thickness with 1 pull ring and U-shaped gasket or rapid lock pull rings with U-shaped gasket up to a diameter of 400 mm.
Ducts up to L = 2000 mm

To ensure assemblies are tight, screws have to be tightened correctly (torque setting 25 Nm). Using a loose flange assembly, M10 (M12) screws have to be tightened to 40 Nm (60 Nm). The entire duct system must be checked regularly for wear and corrosion to ensure its integrity. Worn components must be replaced.

Finn Dombernowsky
Civil Engineer

JKF Duct Systems product programme

JKF Industri A/S develops and manufacturers components for dust extraction and air filtration systems. The product programme comprises ducts, duct systems, filters and fans. The components are sold to ventilation producers and contractors through a world-wide network of dealers, collaborators and subsidiary companies.

Today the components are used by a wide range of businesses within the woodworking, milling, agriculture, plastic, paper, textile, recycling, powder painting, sandblasting, metal working industries, - including the welding, plasma, laser, tobacco and medical industry etc.

JKF Industri
CLEAN AIR INNOVATION SINCE 1957

JKF Industri A/S
Postboks 100
Rørsangervej 5, Als
9560 Hadsund
Denmark

Phone: + 45 98 58 12 11
Fax: + 45 98 58 11 77

E-mail: info@jkf.dk
Internet: www.jkf.dk

Dealers: