JKF

FAN SYSTEMS

PRODUCT PROGRAMME

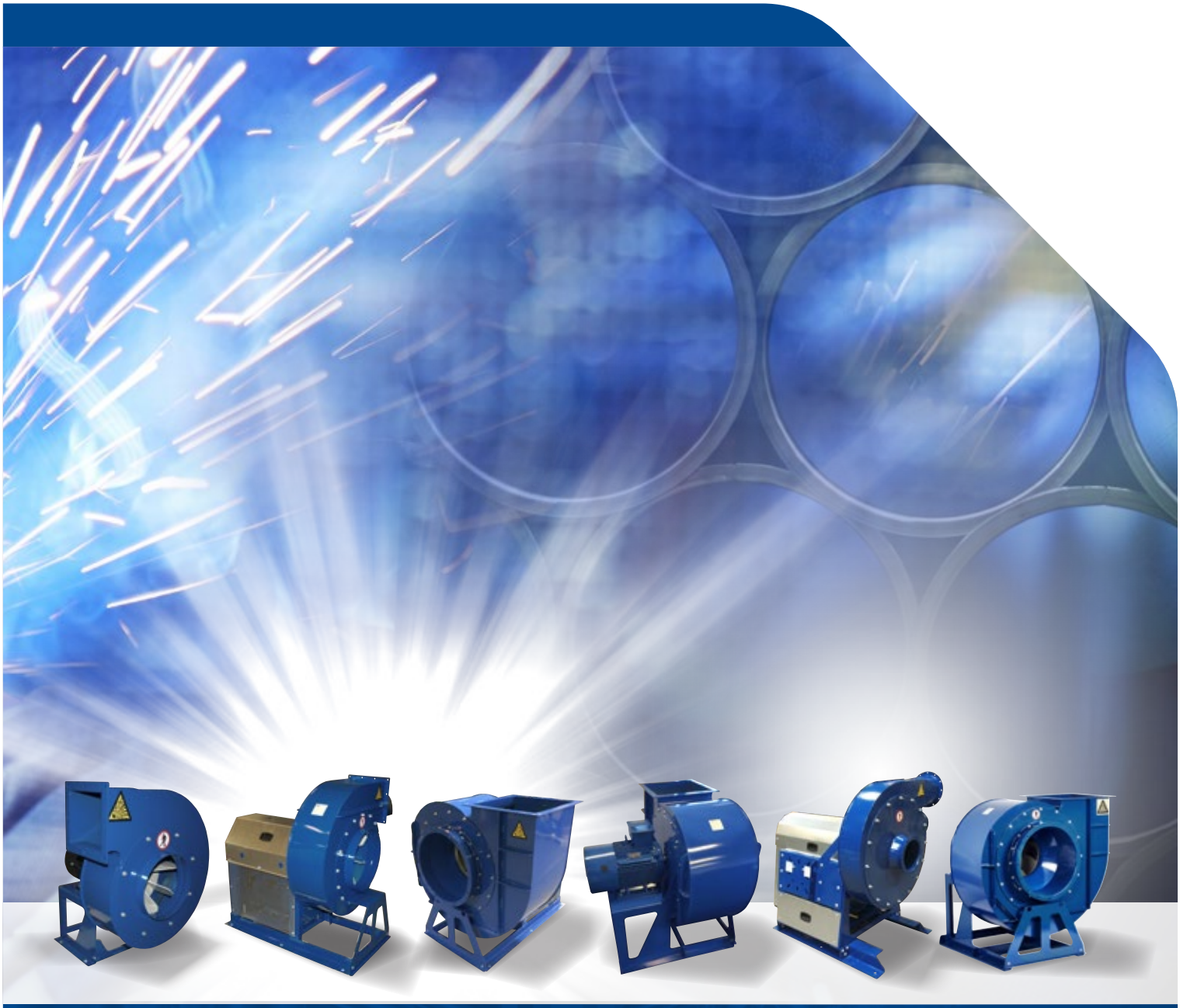

DEDICATED TO **CLEAN AIR**

04.02.2015

Sales, delivery and payment terms

1. Applicability:
These sales, delivery and payment terms (hereinafter "the Terms") apply to all offers, orders and deliveries supplied by JKF Industri A/S, CVR no. 17085204 (hereinafter "JKF Industri") to any customer (hereinafter "the Buyer") (hereinafter collectively referred to as "the Parties"), unless expressly agreed otherwise.

JKF Industri cannot be bound by terms applied by the Buyer, including purchasing terms, even if JKF Industri has not objected to such terms.

2. Offers
All offers are made subject to the goods being unsold. If JKF Industri makes an offer that does not stipulate a specific time for acceptance, the offer will expire if not accepted by the Buyer within 30 days of the date of the offer.

3. Prices
All prices are stated in DKK excluding VAT, customs duties, taxes, transport costs and all other costs which are the responsibility of the Buyer arising from the contractual EXW clause (see below). Prices are stated in EUR exclusive of the aforementioned costs for Buyers located in countries, which are members of the European Economic and Monetary Union (the Euro).

4. Sales and delivery terms
Payment terms are current month + 20 days net calculated from the date of invoice unless otherwise agreed in writing.

If payment is made after the due date and the delay is no fault of JKF Industri, JKF Industri is entitled to charge interest on the sum outstanding as from the due date, at a rate equivalent to 1.5 % per month or part thereof.

The Buyer is not entitled to offset any counterclaims against JKF Industri unless expressly agreed in writing by JKF Industri, and does not have the right to withhold any of the purchase sums by reason of counterclaims of any kind.

5. Retention of title
For Buyers in the United Kingdom:
The goods shall remain the property (i.e. title) of JKF Industri until: (ii) the full price for them is paid; and (ii) all sums for any other goods or services then properly due and payable from the Buyer are paid to JKF Industri. JKF Industri may at any time attribute any money received by it from the Buyer in any order as JKF Industri may decide. Until such payment, the Buyer shall hold the goods on a fiduciary basis as the bailee or depository of JKF Industri, and shall not dispose of them. However, subject to JKF Industri's prior written consent, the Buyer may on the Buyer's own account sell the goods to any customers but shall not do so after any step is taken or made for any composition or arrangement with creditors generally, liquidation, winding-up, dissolution, administration, receivership or bankruptcy of the Buyer. If any such step occurs, or JKF Industri reasonably expects that such a step is soon to occur, or any payment due to JKF Industri from the Buyer becomes overdue, JKF Industri may by written notice terminate the Buyer's right (if any) to sell the goods and JKF Industri may then recover such goods and for that purpose enter any premises, subject to the Buyer's continued liability to pay the price for the goods. If the item has been sold with a view to later being built into or joined to other objects, the item sold is not covered by the right of retention once such installation or joining has taken place.

JKF Industri reserves the right within the limitations of mandatory laws to retention of title to the item sold until payment for the entire purchase sum, plus any costs incurred, has been made to JKF Industri. If the item has been sold with a view to later being built into or joined to other objects, the item sold is not covered by the right of retention once such installation or joining has taken place.

For Buyers outside the United Kingdom:
JKF Industri reserves the right within the limitations of mandatory laws to retention of title to the item sold until payment for the entire purchase sum, plus any costs incurred, has been made to JKF Industri. If the item has been sold with a view to later being built into or joined to other objects, the item sold is not covered by the right of retention once such installation or joining has taken place.

6. Delivery
Unless otherwise agreed in writing between the Parties, the delivery dates stated are EXW JKF Industri's address, with a proviso for possible schedule overruns (see below). The use of EXW means that the goods are deemed to have been delivered and the order fulfilled from the moment they are made available for collection by the Buyer from JKF Industri's address.

Unless otherwise agreed in writing between the Parties, JKF Industri is authorised to order transport on the usual terms on behalf of the Buyer. The Buyer, will continue to bear the risk for arranging transport, and if it cannot be arranged, the goods will be deemed to be delivered from the time at which JKF Industri states the purchaser can collect them. Regardless of which of the Parties has ordered it, shipping will always be at the risk and expense of the Buyer. Transport insurance (if any) will be the responsibility of the Buyer. The delivery clause (EXW) agreed between the Parties is to be interpreted in accordance with the INCOTERMS current at the time of signing the agreement (currently INCOTERMS 2010).

The delivery date is set by JKF Industri according to the best judgement, and if this cannot be kept to, the Buyer will be informed accordingly, with when, as far as possible, delivery can be expected to take place. Any delay does not give the Buyer the right to cancel the sale and/or claim any form of financial compensation from JKF Industri.

7. Packaging
Packaging may only be returned by prior written agreement. Return of packaging is at the Buyer's own expense and risk. The Buyer's packaging will be credited after reception and approval by JKF Industri.

8. Product information and confidentiality
All illustrations, technical drawings and brochures issued by JKF Industri before or after the contract have been entered into remain the property of JKF Industri and must be returned to JKF Industri on request. Such materials must be treated with strict confidentiality and cannot be used, copied or passed on without written agreement, or abused in any other manner.

The Buyer undertakes to generally observe confidentiality concerning all aspects of JKF Industri known to the Buyer as a result of the information the Parties have exchanged in the course of their dealings.

Breach of this provision by the Buyer shall incur a fine payable to JKF Industri of DKK 75,000. The fine shall be payable for each breach of the provision, and if the breach consists of continuation of a previous breach, the fine shall be payable for each 14 day period of continuation or part thereof. Payment of a fine shall not relieve the Buyer of the above obligations, nor prevent or constrain JKF Industri from claiming compensation for any loss JKF Industri may have incurred arising from the breach, in that payment of the fine by the Buyer shall not be included in calculation of JKF Industri's loss. In addition to the above, JKF Industri is entitled to take out an injunction.

9. Liability for defects and deficiencies and warranty claims
Upon receipt of the goods sold at the Buyer's address, the Buyer shall immediately perform a thorough examination of the goods, including quantity and specifications.

Should the Buyer wish to claim for any defects or deficiencies, including with regard to the quantity or specifications delivered, which the Buyer has or should have discovered in the course of thorough examination of the goods, a written claim shall be submitted to JKF Industri without undue delay and within 14 days of receipt of the goods at the Buyer's address. JKF Industri is entitled to reject any claims received after the expiry of the period stated above.

JKF Industri warrants performing redelivery/remedy of goods which are defective or deficient due to material or manufacturing error for goods which the Buyer has not nor should have discovered by thorough examination for a period of 12 consecutive months after delivery. However, the Buyer shall submit a claim to JKF Industri immediately if discovering such defects or deficiencies.

Defective or deficient goods will either be remedied or replaced within a reasonable period of time at JKF Industri's discretion. Modification/interference with the goods without JKF Industri's written consent releases JKF Industri from any obligation.

Remedy/redelivery by JKF Industri of elements of a delivery shall be on the same terms and conditions as for the original delivery, including those stated in item 6. JKF Industri's obligation to remedy or redeliver does not, however, apply to any part of an order more than 1 year after delivery to the Buyer.

Once liability for the order has been transferred to the Buyer, JKF Industri bears no responsibility for any defects over and above the obligations specified in this provision.

10. Force majeure
The following circumstances are intended as examples of events resulting in exemption from liability should they prevent fulfilment of the contract:

Industrial disputes, strikes, lockout or any other circumstances beyond the control of the parties, such as fire, war, mobilisation, unforeseen military call-up, acts of sabotage, requisitioning, confiscation, currency restrictions, import ban, export ban, riots, unrest, fuel shortage, general scarcity of goods, restrictions in power supplies and defects in deliveries from sub-suppliers or delays with such deliveries as a result of any of the aforementioned circumstances.

It should be specifically noted that the above is not an exhaustive list of examples, and there may be other examples that come under limitation of liability. If delivery is temporarily delayed by one or more of the aforementioned circumstances, the delivery date will be correspondingly postponed. If delivery is prevented for more than 12 weeks, JKF Industri is entitled to cancel the relevant contract without liability.

11. Returns
Items sold can only be returned by prior written agreement, and upon obtaining a returned goods order number. Return will be at the Buyer's expense and risk and should include JKF Industri's invoice number and the date of the original delivery.

Returned goods will be credited once they have been inspected and approved, normally to the value of 85% of invoice price (unless otherwise agreed in writing), less any costs incurred by JKF Industri for inspection, preparation or repair. Custom made goods will not be credited. If JKF Industri is charged for shipping costs etc., JKF Industri is also entitled to demand these be refunded by the Buyer and to offset these against any claims by the Buyer against JKF Industri.

12. Product liability
JKF Industri is not liable for damage to property or effects that occur while the item is in the possession of the Buyer. Neither is JKF Industri liable for damage to products manufactured by the Buyer or to products of which these form a part. JKF Industri is not liable for any operating loss, lost earnings or other indirect loss.

To the extent that product liability may be imposed on JKF Industri with regard to third parties, the Buyer is obliged to compensate JKF Industri to the same extent that JKF Industri's liability is limited as per the above. These limitations to JKF Industri's liability do not apply if JKF Industri is guilty of gross negligence. If a third party puts forward a claim against one of the Parties for compensation with reference to this point, that party must immediately inform the other party. The Buyer can be sued at the same court that handles any claims for compensation against JKF Industri, in consequence of damage alleged to have been caused by one of JKF Industri's deliveries. JKF Industri's product liability can never exceed the cover JKF Industri has for product liability insurance.

13. Compensation
Notwithstanding the above, JKF Industri cannot be held liable for any indirect loss such as operating loss, consequential loss, loss of profit etc., which a defect or deficiency could cause the Buyer or a third party, including indirect loss etc., arising as a result of delayed delivery or defects/deficiencies in the goods sold.

Any compensation claim against JKF Industri cannot exceed the invoice value for the goods sold.

14. Invalidity
Should one or more of the provisions in these terms be deemed invalid, illegal or non-applicable, the validity, legality or applicability of all other provisions shall not be affected or lessened as a result thereof.

15. Jurisdiction and court of venue
All disputes between the parties shall be settled under Danish Law including the Danish Sale of Goods Act, but with the exception of Danish jurisdiction rules. The International Sale of Goods Act (CISG) shall neither be wholly nor partially applied.

Any dispute regulated by the terms shall be resolved by arbitration at the Danish Institute of Arbitration, according to the institute's rules, which apply when an arbitration case is brought with the amendments stated below.

However, the Parties agree that the arbitral tribunal shall consist of 3 members, of whom each party will appoint one member, and the Danish Institute of Arbitration will appoint the tribunal chairman. If a party fails to appoint a member within 14 days of being requested to do so by the Danish Institute of Arbitration, the institute will appoint a member on behalf of that party.

The tribunal shall sit in Hadsund.

The original version of this document is in Danish. In the event of discrepancies between the Danish and English versions, the Danish version will take preference.

18.04.2017

Table of contents

Section 00. General

Sales, delivery and payment terms ..... Page 02
Table of contents ..... Page 03
Fan types ..... Page 04
Fan selection ..... Page 05 - 07
How to read fan graphs ..... Page 08

Section 01. Fan types JK-20D – JK-40D

Fan types JK-20D - JK-40D general ..... Page 09
Fan type JK-20D ..... Page 10
Fan type JK-22D ..... Page 11
Fan type JK-25D ..... Page 12
Fan type JK-30D ..... Page 13
Fan type JK-35D ..... Page 14
Fan type JK-40D ..... Page 15

Section 02. Fan types JK-30K - JK-75K

Fan types JK-30K - JK-75K general ..... Page 16
Fan type JK-30K ..... Page 17
Fan type JK-40K ..... Page 18
Fan type JK-45K ..... Page 19
Fan type JK-55K ..... Page 20
Fan type JK-75K ..... Page 21

Section 03. Fan type T-200D/K – T-500D/K

Fan type T-200D/K - T-500D/K generelt ..... Page 22
Fan type T-200K and T-200D ..... Page 23 - 24
Fan type T-300K and T-300D ..... Page 25 - 26
Fan type T-400K and T-400D ..... Page 27 - 28
Fan type T-500K and T-500D ..... Page 29 - 30

Section 04. Fan types JK-30MTDP - JK-90MTDP

Fan types JK-30MTDP – JK-40MTDP – JK-50MTDP ..... Page 31
Fan type JK-30MTDP ..... Page 32
Fan type JK-40MTDP ..... Page 33
Fan type JK-50MTDP ..... Page 34
Fan types JK-60MTDP - JK-70MTDP - JK-80MTDP - JK-90MTDP ..... Page 35
Fan type JK-60MTDP ..... Page 36
Fan type JK-70MTDP ..... Page 37
Fan type JK-80MTDP ..... Page 38
Fan type JK-90MTDP ..... Page 39

Section 05. Fan types JK-30MTD - JK-90MTD

Fan types JK-30MTD - JK-50MTD general ..... Page 40
Fan type JK-30MTD ..... Page 41
Fan type JK-40MTD ..... Page 42
Fan type JK-50MTD ..... Page 43
Fan types JK-55MTD and JK-90MTD general ..... Page 44
Fan type JK-55MTD ..... Page 45
Fan type JK-60MTD ..... Page 46
Fan type JK-70MTD ..... Page 47
Fan type JK-80MTD ..... Page 48
Fan type JK-90MTD ..... Page 49

Section 06. Fan types JK-30MT - JK-100MT

Fan types JK-30MT - JK-100MT general ..... Page 50
Fan type JK-30MT ..... Page 51
Fan type JK-40MT ..... Page 52
Fan type JK-50MT ..... Page 53
Fan type JK-60MT ..... Page 54
Fan type JK-70MT ..... Page 55
Fan type JK-80MT ..... Page 56
Fan type JK-90MT ..... Page 57
Fan type JK-100MT ..... Page 58

Section 07. High-pressure fans type JK-HT Injectors and feeder units

High-pressure fans type JK-HT ..... Page 59 - 60
Injectors and feeder units ..... Page 61

Section 08. Accessories

Flanges ..... Page 62
Twist throttles ..... Page 63
Acoustic booths type AB ..... Page 64 - 65
Duct silencers ø100 - ø1250 mm ..... Page 66 - 67
Vibration dampers, cooling wings, gaskets, pullers ..... Page 68 - 69
Flexible connections ..... Page 70

01.06.2010

Fan types

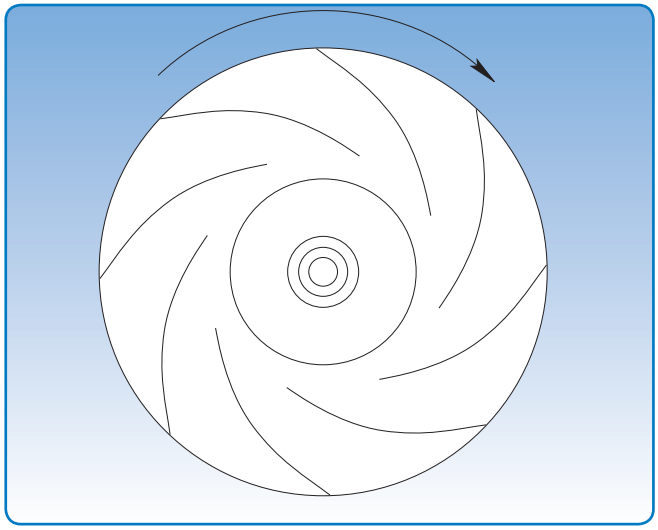

Radial fan with P-impeller

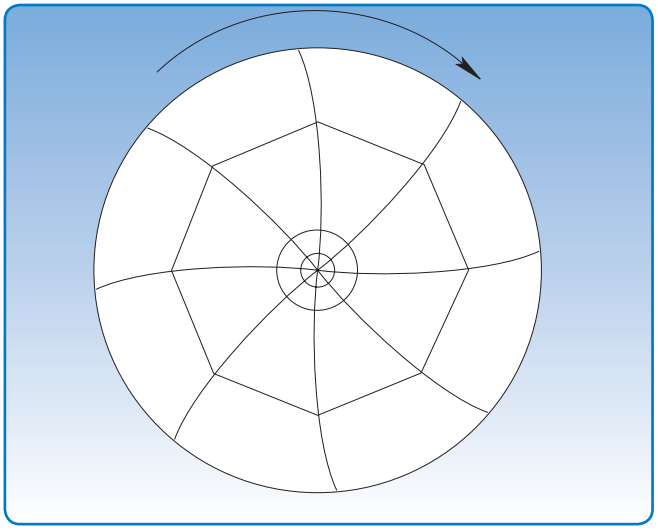

Radial fan with T-impeller

General
Resistance occurs in all forms of air transport due to friction which means that overall pressure is reduced in the flow direction. To effect and maintain air transport, pressure has to be increased at some stage to compensate for pressure loss. This is usually achieved in fan systems using radial and axial fans designed to boost air flow in the direction of the outlet.

Definitions

Static pressure:	p_s
Dynamic pressure:	p_d
Total pressure:	p_t

Static pressure is designated positive or negative depending on whether there is over or under pressure in the duct. On the other hand, dynamic pressure is always positive and depends on the speed of the air in the duct.

Total pressure must always be equal to the sum of the static and dynamic pressure at the measurement point, which can be expressed as:

$P_t = P_s + P_d$

Volume flow
A fan's effect is always based on actual volume flow through the inlet. If the volume flow is indicated at a temperature different to that at the fan in a given operating situation, it must be corrected.

Temperatures
The graphs indicate 20°C. Fans can be used for temperatures up to 60°C without physical modification.
At temperatures other than 20°C, the air density is changed. This means it may be necessary to adjust the min^{-1}. At temperatures over 20°C the fan will generally be giving reduced effect in relation to the rise in temperature.
For high temperatures, the following should be taken into consideration: bearings and lubricant - whether the fan should be fitted with cooling wings – whether the motor should be supplied with extra cooling (particularly important for frequency regulation). For temperatures in excess of 60°C, extra cooling is required.

Fan types
Motors and fans are usually supplied as a unit. JKF has designed its fans for optimal performance, and it is vital to select the right one for any given task. The speed at which the fan is to run can be seen from the graph for that fan. The power input required depends on resistance in the system.

There are many types of fan impeller, each of which is designed for a given task:

- Radial fan with P-impeller
- Radial fan with T-impeller

Radial fan with P-impeller
Has flat backward-inclined blades and is designed for clean air transport. This type has the following properties:

- High efficiency
- Robust construction
- Only small variations in volume flow if resistance fluctuates.

Radial fan with T-impeller
Has backward-inclined blades and is designed for transport of a range of materials. This type has the following properties:

- Medium and high-pressure versions
- Robust construction
- High degree of self-cleaning
- Can handle large material volumes
- Special version available for transport of plastic and paper

All fans are ATEX-certified in accordance with Directive 94/9 EF.

Fan selection

Useful effect
Theoretical pressure increase is never achieved in practice, as all fans work with several unavoidable types of loss, including:

- Friction loss in housing and impeller
- Thrust loss at blade inlet
- Leakage between housing and impeller
- Loss due to impeller friction
- Loss in motor, belts and bearings

JKF states the total useful effect.

The useful effect for a given operating point indicates the relationship between the utilisation effect (air effect) and the power input (shaft effect). The utilisation effect is the product of volume flow and total pressure increase.
The useful effect of the fan can be expressed as follows:

$$\eta_v = \frac{q_v \times \Delta p_1}{P}$$

and its effect consumption as:

$$P = \frac{q_v \times \Delta p_1}{\eta_v} [W]$$

where

P = shaft effect [W] of the fan
q_V = volume flow [m^3/s]
Δp_1 = total pressure increase [Pa]
η_v = useful effect of the fan [decimal fraction]

Any loss from the belt drive and motor have to be added, so that total effect consumption can be expressed as:

$$P_1 = \frac{q_v \times \Delta p_1}{\eta_v \times \eta_r \times \eta_m}$$

where

η_v = useful effect of the fan
η_r = useful effect of the belt
η_m = useful effect of the motor

Fan diagram
For description of fans for specific solutions, the following parameters are required:

- Volume flow
- Pressure increase
- Effect consumption
- min^{-1}
- Useful effect
- Noise intrusion

Fan graphs are based on a density of 1.2 kg/m³ equivalent to air density at 20°C and barometric pressure of 101.3 kPa.

Capacity regulation of fans
All fan systems of any size can be fitted with capacity regulation to match volume flow to the usage patterns of the plant. Depending on operating requirements, fan performance can be regulated in several ways:

- Pole-switching between two fixed speed regulator values (2-speed motor)
- Twist throttle on fan inlet side
- min^{-1} regulation using a frequency transformer
- A combination of the above

Using a frequency transformer maintains the fan useful effect almost unchanged across the entire regulation range and avoids noise being created during regulation.

Accessories
- Twist throttle is available as a component
- 60 Hz impeller for transport fan

The impeller has to b e modified for 60 Hz direct driven transport fans. Belt-driven fans are adjusted via the pulleys.

The SKF bearing housings on the fans are types SNL…TA, with V-gasket TSN…A.

Surface treatment
JKF's painted fans fulfil corrosion class C3, cf. ISO 12944. JKF has the latest powder-coating equipment – a 3 zone, high-tech computer-controlled and fully automatic installation which ensures high and uniform quality for all painted items, for painting small items (B1,0×H2,0×D0,5 m). Powder is applied by robot with coat thicknesses of 100 - 120 my.
A powder coating plant for larger items (B2,5×H2,5×D4,0 m) is used with integrated sandblasting facility. Powder application is manual. Prior to the paint application, the items is sandblasted to SA2,5 using steel balls. The items are blown thoroughly clean and their surfaces sanded to ensure maximum adhesion.

Powder coating has a number of benefits:
• high quality, impact and scratch-resistant surface.
• high material usage – no evaporation
• Less impact on the environment, no solvents.
If a higher corrosion class is required, please specify when ordering. JKF can supply products which fulfil up to corrosion class C4 cf. ISO 12944. All painted standard products are blue RAL 5010. Can be delivered in other colors against an additional charge. The impeller are supplied untreated due to the balancing. The standard version of the electric motor is black. Can be delivered in other colors against an additional charge and an extended time of delivery.

Test
All fans are tested for function and vibration.

When ordering, JKF requires the following information:
Fan type – air volume – air temperature - pressure – material transport/ nature – installation conditions – noise levels – effect consumption - motor – motor integrity class – operating time - surface treatment, zone placing (ATEX) – and any other requirements.

Fan selection

Type JK-D

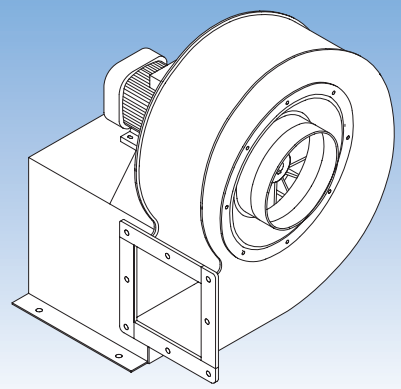

- Transport fan
- Direct drive
- Air volume from 750 to 11,000 m³/h
- Pressure: 110 –440 mm WG

Page 9-15

Type JK-K

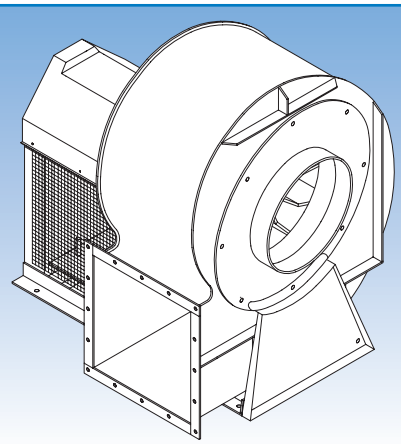

- Transport fan
- Indirect drive
- Air volume from 2,800 to 40,000 m³/h
- Pressure: 60 – 600 mm WG

Page 16-21

Type T-K

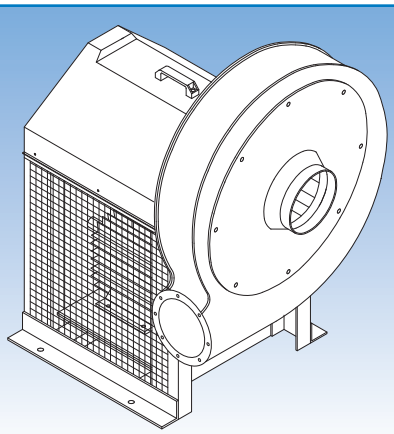

- Transport fan
- Indirect drive
- Air volume from 2,000 to 13,000 m³/h
- Pressure: 250 – 1,000 mm WG

Page 22-30

24.02.2016

Fan selection

Type JK-MTD

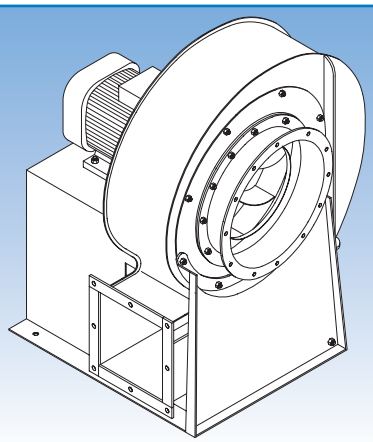

- Clean air fan
- Direct drive
- Air volume from 2,000 to 88,000 m³/h
- Pressure: 120 – 600 mm WG

Page 31-39

Type JK-MT

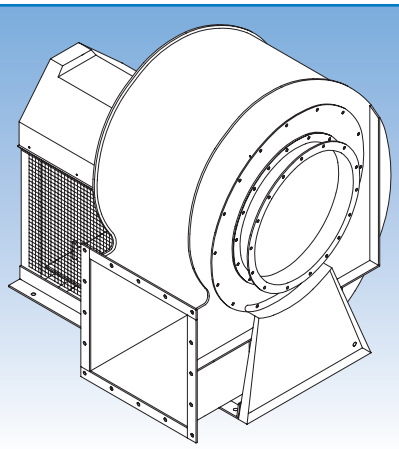

- Clean air fan
- Indirect drive
- Air volume from 2,500 to 115,000 m³/h
- Pressure: 80 – 600 mm WG

Page 40-48

01.06.2010

How to read fan graphs

In practice it is highly likely that the operational point for a fan will not appear on the graphs referring to useful effect, but between them.
Determination of values for the operational point selected can be calculated using the following formulas:

Total useful effect

$$\eta_T = \frac{p \times Q \times 9{,}81}{1000 \times P}$$

p = Total pressure read from graph in mm WG
Q = Air volume read from graph in m³/h
P = Power input to electric motor in kW

When calculating useful effect

When only working with power input to the impeller, the following formulas can be used:

For *direct drive fans* the useful effect is
$\eta_D = \eta_T + 10\%$
For *indirect drive fans* the useful effect is
$\eta_{ID} = \eta_T + 10\% + 6\%$

For noise calculation

The following formulas can be used along with sound measurement apparatus:

min⁻¹ adjustment:

$$L_2 = L_1 + 60 \times \log \frac{n_2}{n_1}$$

L_1 = Noise level at min⁻¹ n_1
n_2 = New min⁻¹

Noise level at various distances:

$$L_{PA} = L_{WA} - (20 \times \log R) + (10 \times \log Q) - 11 \text{ dB(A)}$$

L_{WA} = Noise effect
R = Distance between noise source and receiver
Q = Direction factor
Q = 2 (hemispherical spread)
Q = 4 (quartspherical spread)
Q = 8 (octaspherical spread)

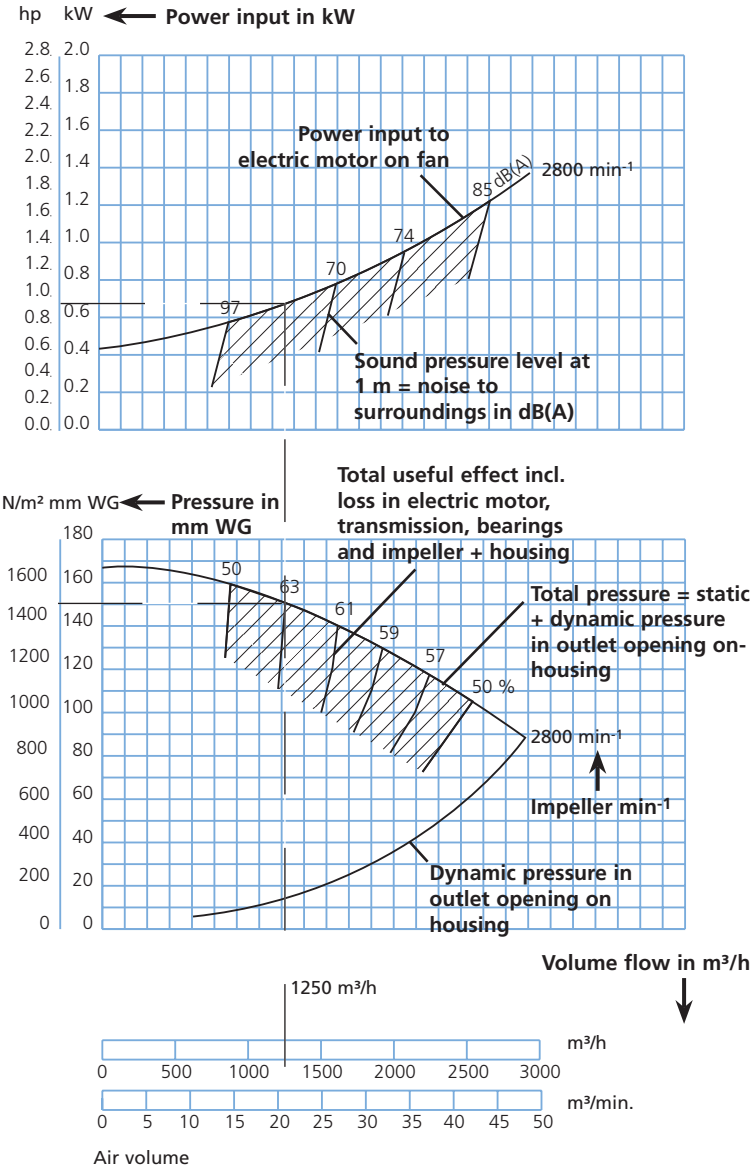

Example at 1250 m³/h

Read-off from graph for useful effect and pressure will show 150 mm WG and useful effect of 63%. The power input graph will show a read-off of 0.7 kW at 1250 m³/h.

Every effort should be made to set a fan up to achieve the best useful effect possible.

01.06.2010

Fan types JK-20D - JK-40D

The direct drive centrifugal fan types JK-20D - JK-40D are designed for material handling.

Equipped with self-cleaning impellers with backward-inclined blades and aerodynamic intake. The impellers are statically and dynamically balanced.

Max. operating temperature: 60°C

Number of blades are reduced by 2 for paper impeller.

Available in anti-spark version with stainless steel inlet and explosion-proof (Eex) motor.

Dimensions (D) for the inlet are external. Supplied smooth.

Specific dimensions for the outlet flanges can be found under “Flanges”.

The technical data for each type appears on the following pages.

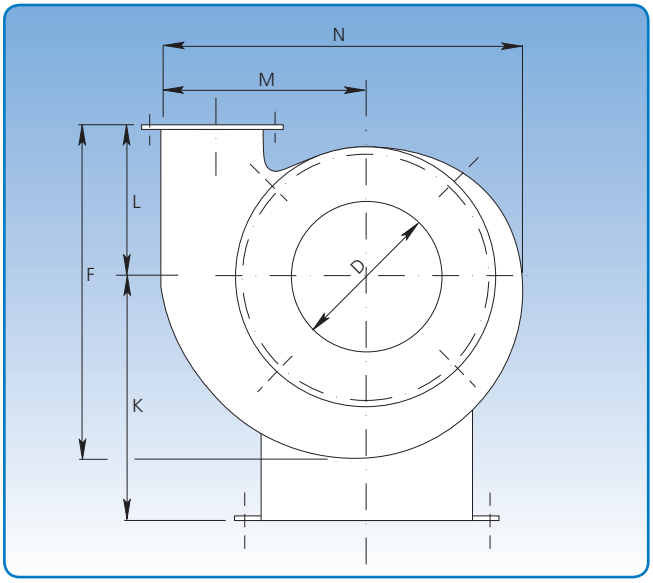

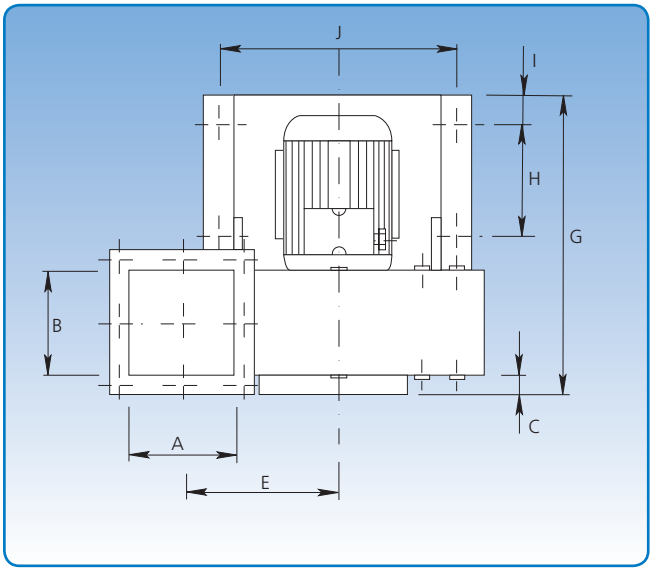

Steel plate dimensions in mm

Type	JK-20D - JK-30D	JK-35D - JK-40D
Impeller - standard	4	5
Impeller - reinforced	8	8
Fan housing - standard	3	3
Fan housing - reinforced	6	8

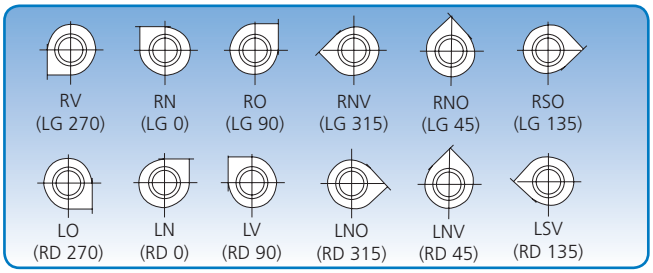

6 positions. The position illustrations are viewed from the inlet side.

Type	Dimensions														Weight without motor kg
	A mm	B mm	C mm	D mm	E mm	F mm	G mm	H mm	I mm	J mm	K mm	L mm	M mm	N mm	
JK-20D	140	140	33	200	207	448	400	141	40	317	325	198	284	500	27
JK-22D	166	166	29	225	220	500	475	192	40	326	340	224	310	552	34
JK-25D	186	186	30	250	248	582	530	210	50	356	384	273	348	618	45
JK-30D	206	206	36	300	267	631	577	230	50	356	415	293	377	676	50
JK-35D	225	225	45	350	320	670	735	360	50	390	515	293	438	770	73
JK-40D	251	251	55	400	330	740	795	400	50	488	500	326	462	824	88

01.06.2010

Fan type JK-20D
Technical data

Motor: IP 55

Supplied with the following motors:

kW	hp	amp.	Weight of motor kg
1,1	1,5	4,3	10

Max. min^{-1}:

Standard impeller: 3.200 min^{-1}

Reinforced impeller: 2.840 min^{-1}

Operating range:

Air volume: 750 - 1.800 m³/h

Pressure: 110 - 155 mmWG

Power supply:

230 V - 50 Hz.

Construction:

B3 - motor mounted on foot.

Variants:

Fan can be powered by flange motor - type B5/B14.

Impeller:

No. of blades, standard: 8 pcs.

Diameter: ø295 mm

Height: 114 mm

The blue curve applies for 6-bladed impeller.

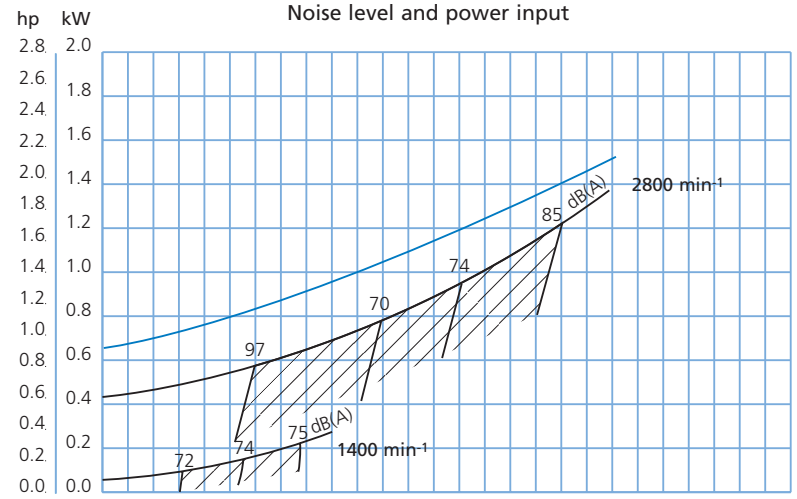

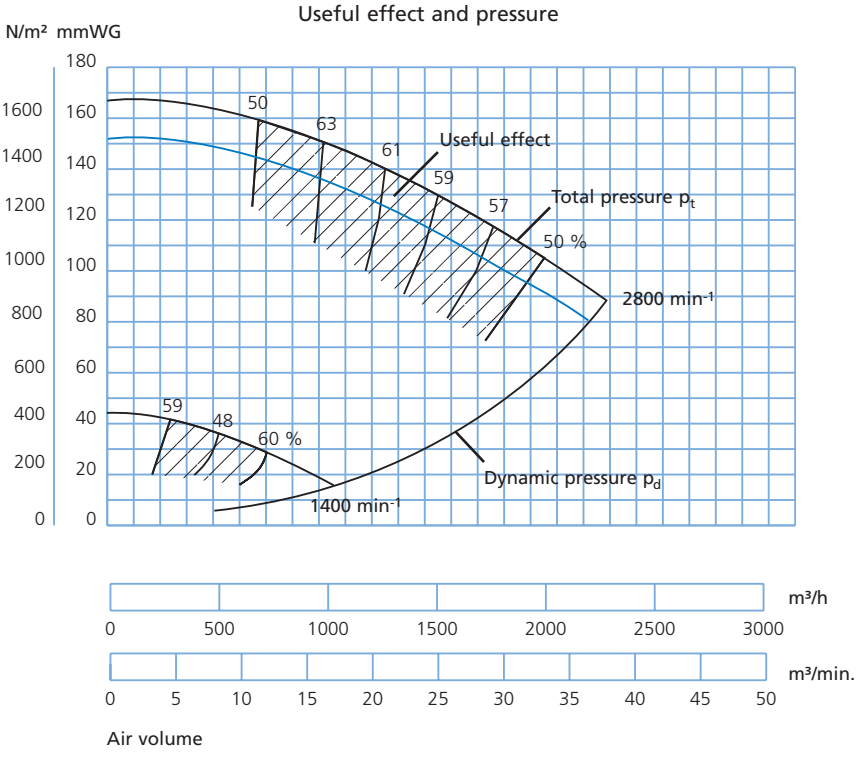

01.06.2010

Fan type JK-22D
Technical data

Motor: IP 55

Supplied with the following motors:

kW	hp	amp.	Weight of motor kg
2,2	3,0	8,0	14

Max. min^{-1}:

Standard impeller: 3.200 min^{-1}

Reinforced impeller: 2.865 min^{-1}

Operating range:

Air volume: 1.000 - 3.100 m³/h

Pressure: 130 - 200 mmWG

Power supply:

230 V - 50 Hz.

Construction:

B3 - motor mounted on foot.

Variants:

Fan can be powered by flange motor
- type B5/B14.

Impeller:

No. of blades, standard: 8 pcs.

Diameter: ø300 mm

Height: 139 mm

The blue curve applies for 6-bladed impeller.

Noise level and power input

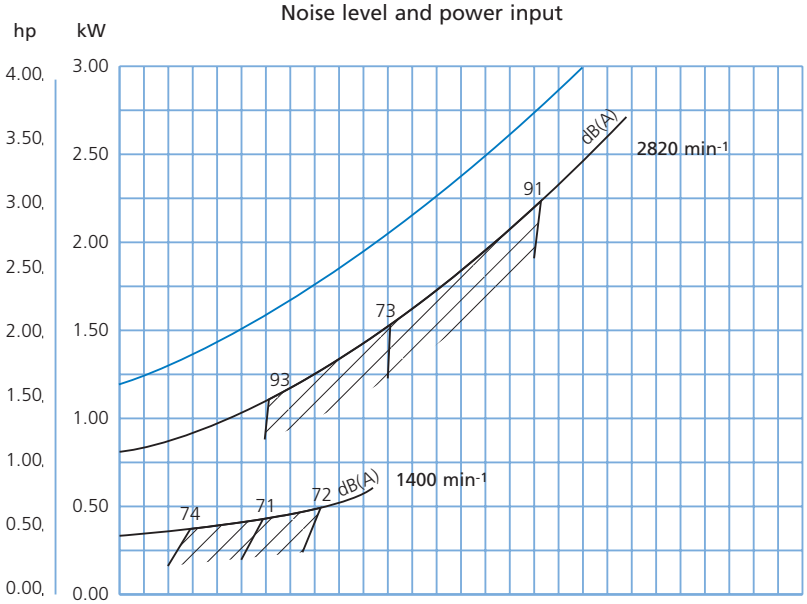

Useful effect and pressure

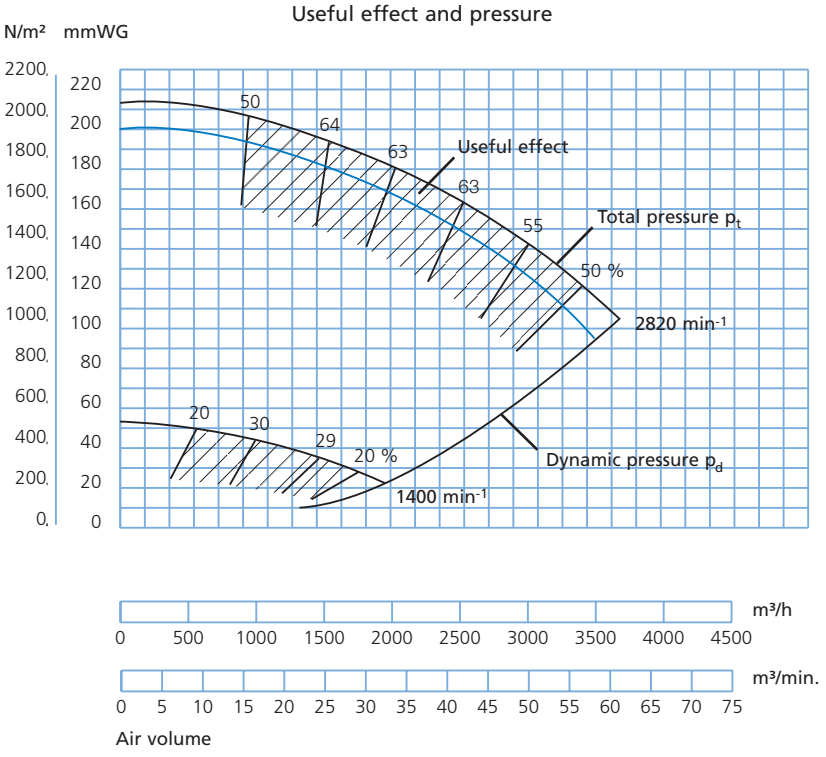

01.06.2010

Fan type JK-25D
Technical data

Motor: IP 55

Supplied with the following motors:

kW	hp	amp.	Weight of motor kg
4,0	5,5	7,7	31

Max. min^{-1}:

Standard impeller: 3.200 min^{-1}

Reinforced impeller: 2.865 min^{-1}

Operating range:

Air volume: 1.500 - 4.500 m³/h

Pressure: 160 - 240 mmWG

Power supply:

400 V - 50 Hz.

Construction:

B3 - motor mounted on foot.

Variants:

Fan can be powered by flange motor - type B5/B14.

Impeller:

No. of blades, standard: 8 pcs.

Diameter: ø360 mm

Height: 143 mm

The blue curve applies for 6-bladed impeller.

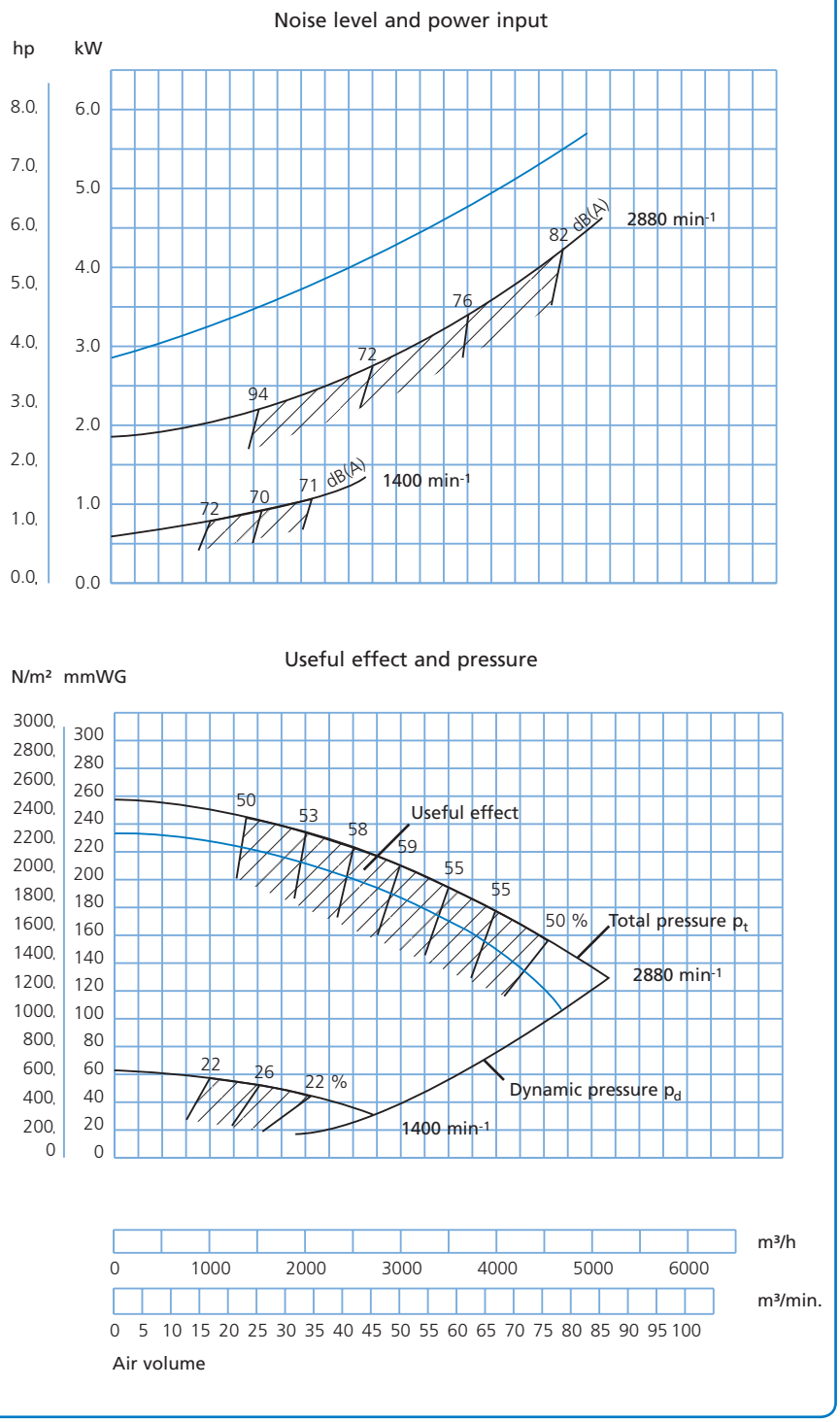

01.06.2010

Fan type JK-30D
Technical data

Motor: IP 55

Supplied with the following motors:

kW	hp	amp.	Weight of motor kg
5,5	7,5	11,1	43
7,5	10,0	14,7	49

Max. min^{-1}:

Standard impeller: 3.200 min^{-1}

Reinforced impeller: 2.895 min^{-1}

Operating range:

Air volume: 2.500 - 6.500 m³/h

Pressure: 200 - 290 mmWG

Power supply:

400 V - 50 Hz.

Construction:

B3 - motor mounted on foot.

Variants:

Fan can be powered by flange motor
- type B5/B14.

Impeller:

No. of blades, standard: 8 pcs.

Diameter: ø410 mm

Height: 154 mm

The blue curve applies for 6-bladed impeller.

Noise level and power input

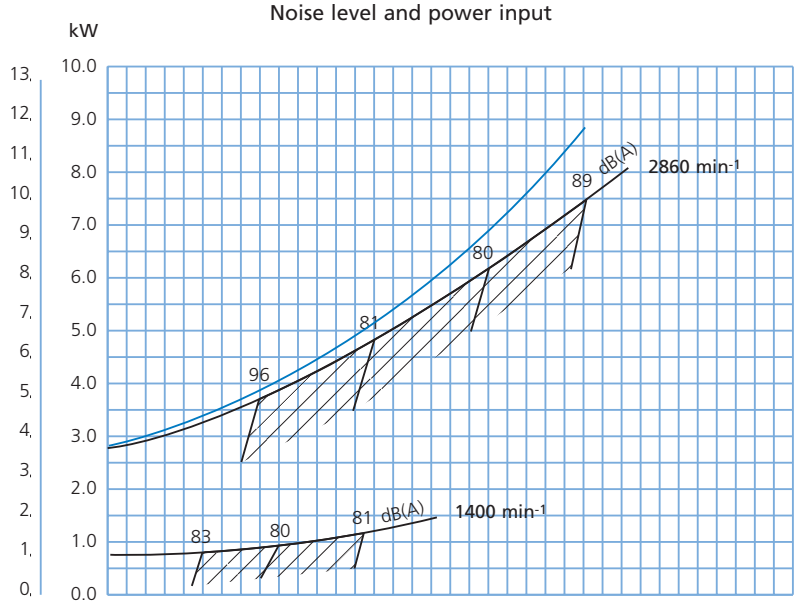

Useful effect and pressure

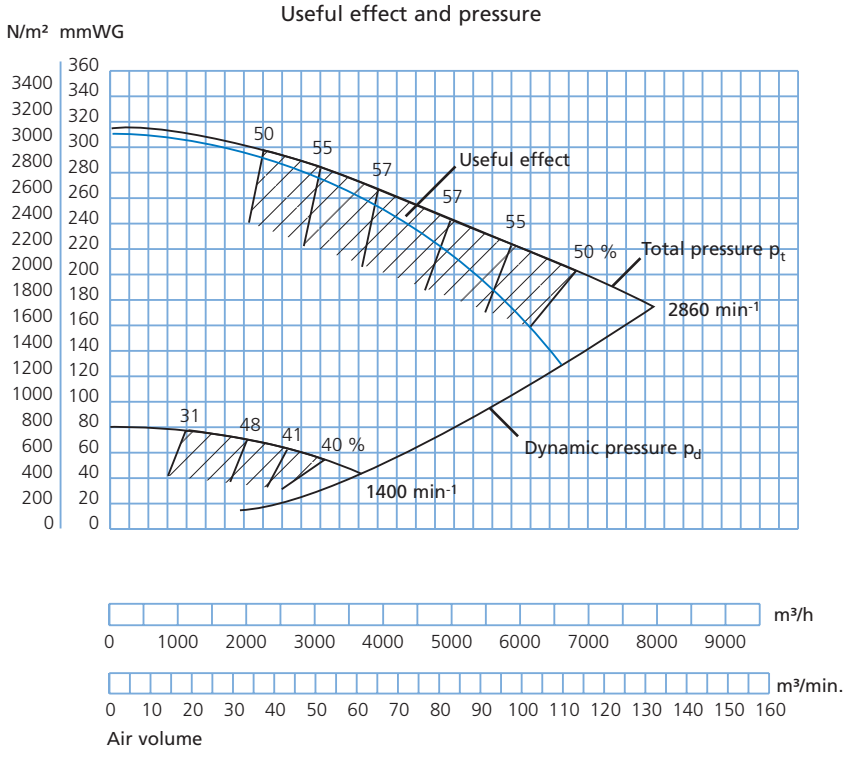

01.06.2010

Fan type JK-35D
Technical data

Motor: IP 55

Supplied with the following motors:

kW	hp	amp.	Weight of motor kg
11,0	15,0	21,2	69
15,0	20,0	28,2	83

Max. min^{-1}:

Standard impeller: 3.200 min^{-1}

Reinforced impeller: 2.915 min^{-1}

Operating range:

Air volume: 3.000 - 8.500 m³/h

Pressure: 260 - 375 mmWG

Power supply:

400 V - 50 Hz.

Construction:

B3 - motor mounted on foot.

Variants:

Fan can be powered by flange motor - type B5/B14.

Impeller:

No. of blades, standard: 8 pcs.

Diameter: ø450 mm

Height: 185 mm

The blue curve applies for 6-bladed impeller.

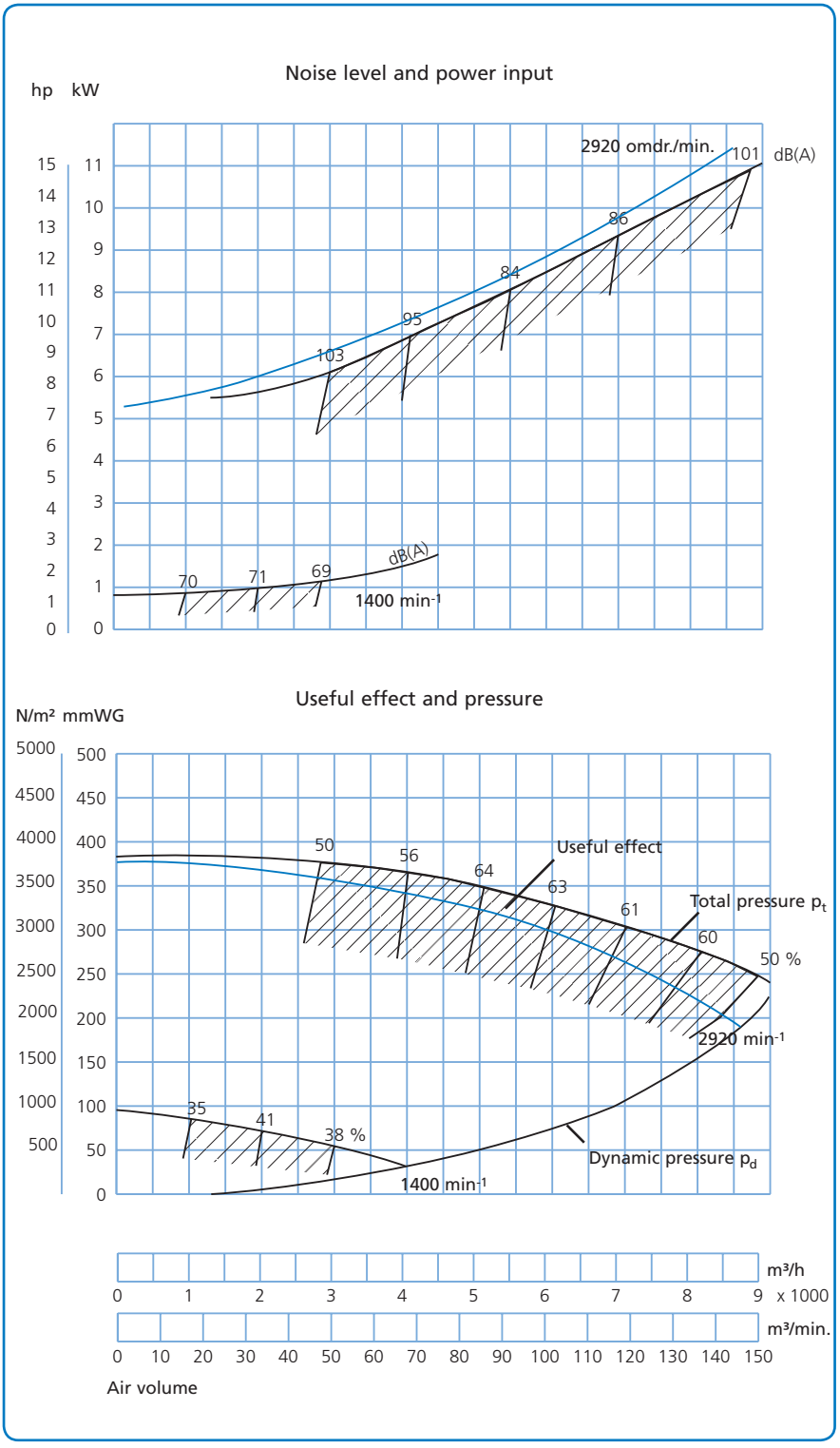

01.06.2010

Fan type JK-40D
Technical data

Motor: IP 55

Supplied with the following motors:

kW	hp	amp.	Weight of motor kg
18,5	25,0	34,4	87
22,0	30,0	40,0	165

Max. min^{-1}:

Standard impeller: 3.200 min^{-1}

Reinforced impeller: 2.930 min^{-1}

Operating range:

Air volume: 5.000 - 11.000 m³/h

Pressure: 340 - 440 mmWG

Power supply:

400 V - 50 Hz.

Construction:

B3 - motor mounted on foot.

Variants:

Fan can be powered by flange motor
- type B5/B14.

Impeller:

No. of blades, standard: 8 pcs.

Diameter: ø500 mm

Height: 185 mm

The blue curve applies for 6-bladed impeller.

Noise level and power input

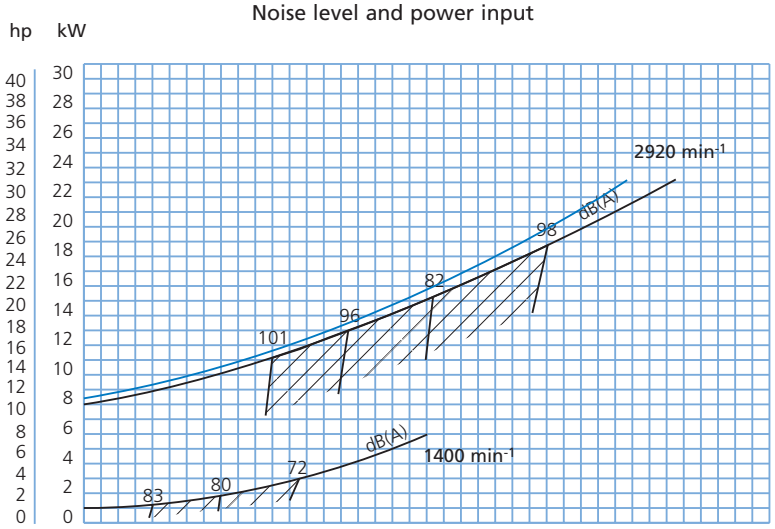

Useful effect and pressure

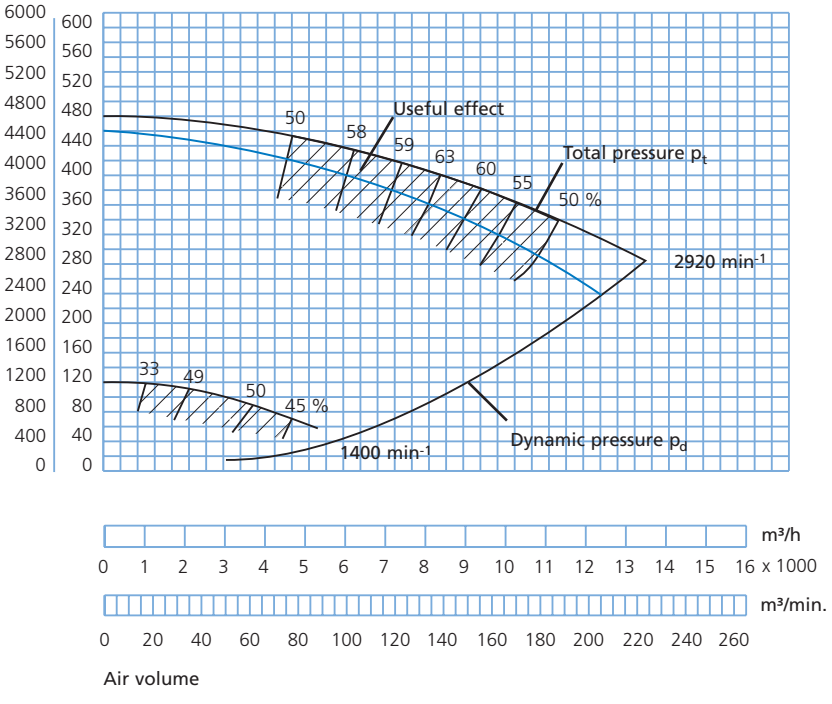

13.02.2013

Fan types JK-30K - JK-75K

The indirect drive centrifugal fan types JK-30K - JK-75K are designed for material handling.

Equipped with self-cleaning impellers with backward-inclined blades and aerodynamic intake. The impellers are statically and dynamically balanced.

The pulleys are shaft-mounted with taperlock bushing, allowing easy replacement for changed fan speed.

Max. operating temperature: 60°C
With cooling wings: Up to 200°C

Number of blades are reduced by 2 for paper impeller.

Available in anti-spark version with stainless steel inlet and explosion-proof (Eex) motor.

Dimensions (D) for the inlet are external. Supplied smooth.

Belt drive is anti-static.

Specific dimensions for the outlet flanges can be found under “Flanges”.

The technical data for each type appears on the following pages.

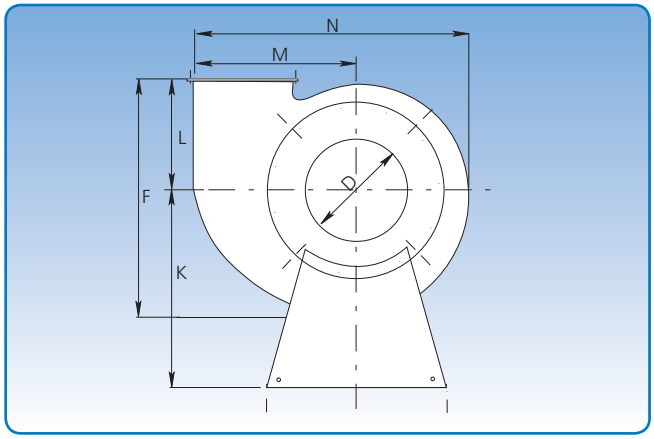

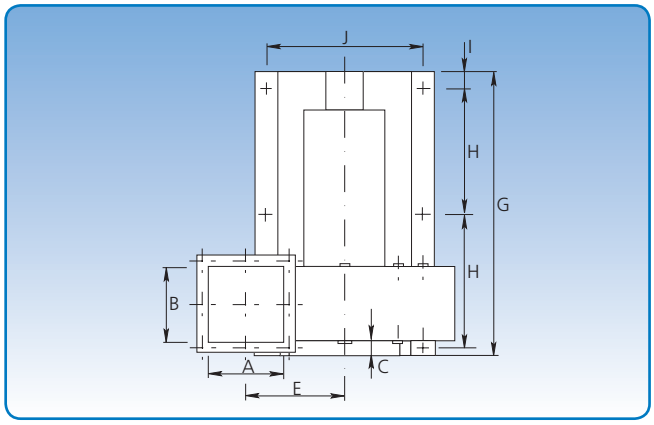

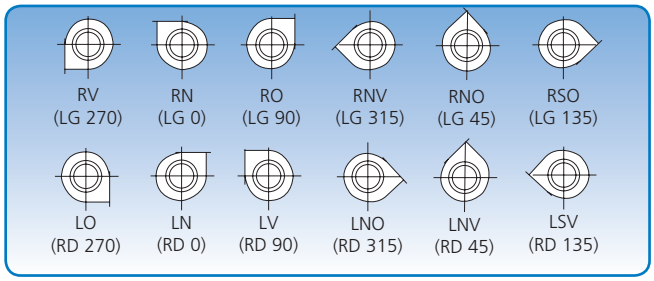

6 positions. The position illustrations are viewed from the inlet side.

Steel plate dimensions in mm

Type	JK-30K	JK-40K - JK-45K	JK-55K	JK-75K
Impeller - standard	4	5		6
Impeller - reinforced	8	8	8	8
Fan housing - standard	3	3		4
Fan housing - reinforced	6	8		8

Type	Dimensions														Weight without motor kg
	A mm	B mm	C mm	D mm	E mm	F mm	G mm	H mm	I mm	J mm	K mm	L mm	M mm	N mm	
JK-30K	206	206	36	300	267	631	860	370	55	430	550	293	377	676	79
JK-40K	250	250	55	400	330	740	1110	494	55	550	650	326	462	824	200
JK-45K	339	339	55	450	395	885	1207	528	55	672	720	375	570	1013	300
JK-55K	418	418	60	550	500	1095	1540	700	59	825	955	468	715	1250	532
JK-75K	700	550	60	750	442	1310	1875	855	70	850	1125	600	800	1410	597

01.06.2010

Fan type JK-30K
Technical data

Motor: IP 55

Supplied with the following motors:

kW	hp	amp.	Weight of motor kg
5,5	7,5	11,1	43
7,5	10,0	14,7	49

Max. min^{-1}:

Standard impeller: 3,575 min^{-1}

Reinforced impeller: 2,700 min^{-1}

Operating range:

Air volume: 2,800 – 6,500 m³/h

Pressure: 60 – 320 mm WG

Power supply:

400 V - 50 Hz.

Construction:

B3 - motor mounted on foot.

Impeller:

No. of blades, standard: 8 pcs.

Diameter: ø410 mm

Height: 154 mm

Noise level and power input

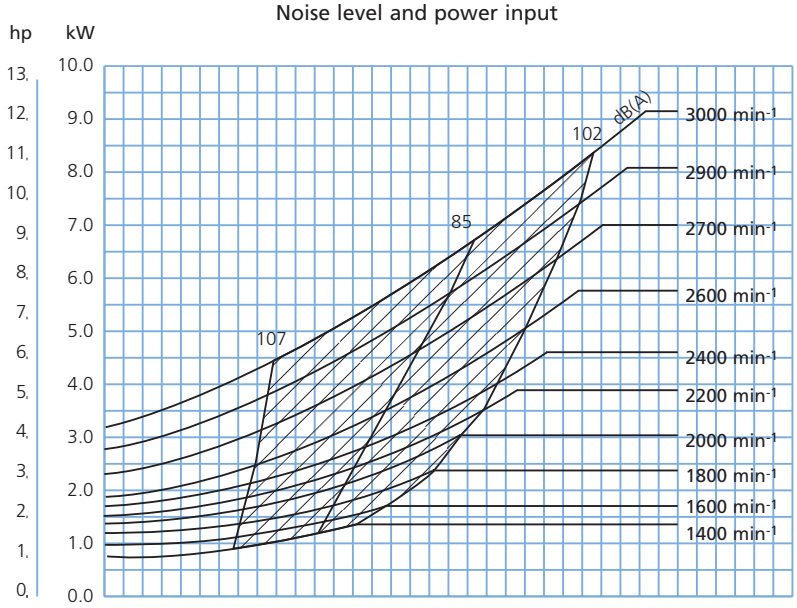

Useful effect and pressure

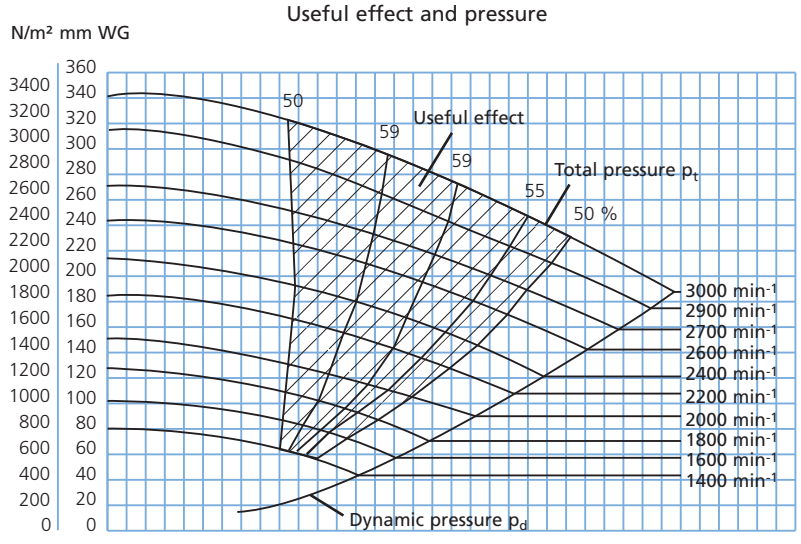

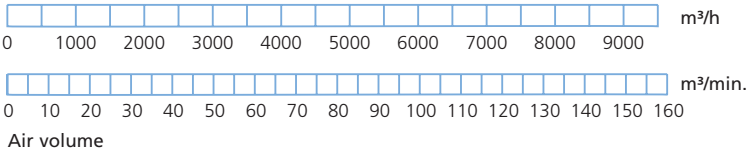

08.09.2014

Fan type JK-40K
Technical data

Motor: IP 55

Supplied with the following motors:

kW	hp	amp.	Weight of motor kg
11,0	15,0	21,2	64
15,0	20,0	28,2	121
18,5	25,0	33,0	136

Max. min^{-1}:

Standard impeller: 3,435 min^{-1}

Reinforced impeller: 2,600 min^{-1}

Operating range:

Air volume: 5,000 – 11,000 m³/h

Pressure: 140 – 540 mm WG

Power supply:

400 V - 50 Hz.

Construction:

B3 - motor mounted on foot.

Impeller:

No. of blades, standard: 8 pcs.

Diameter: ø500 mm

Height: 189 mm

Noise level and power input

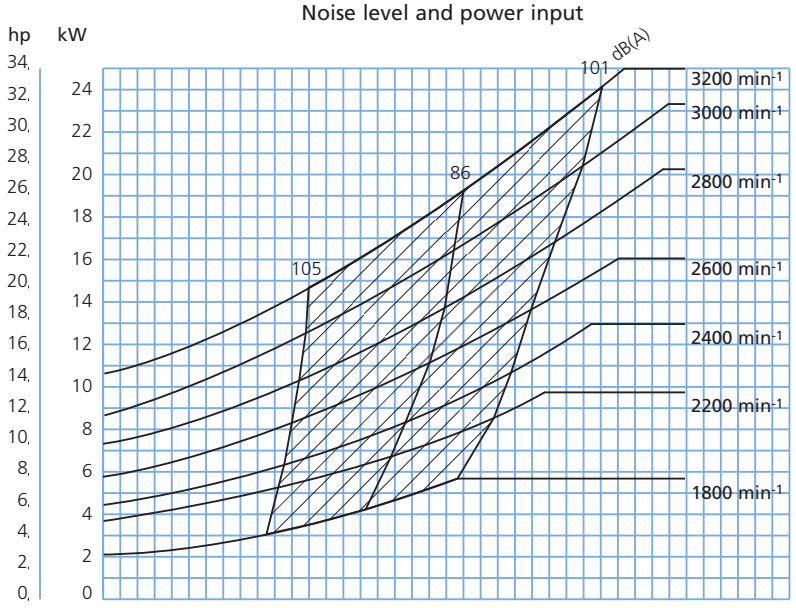

Useful effect and pressure

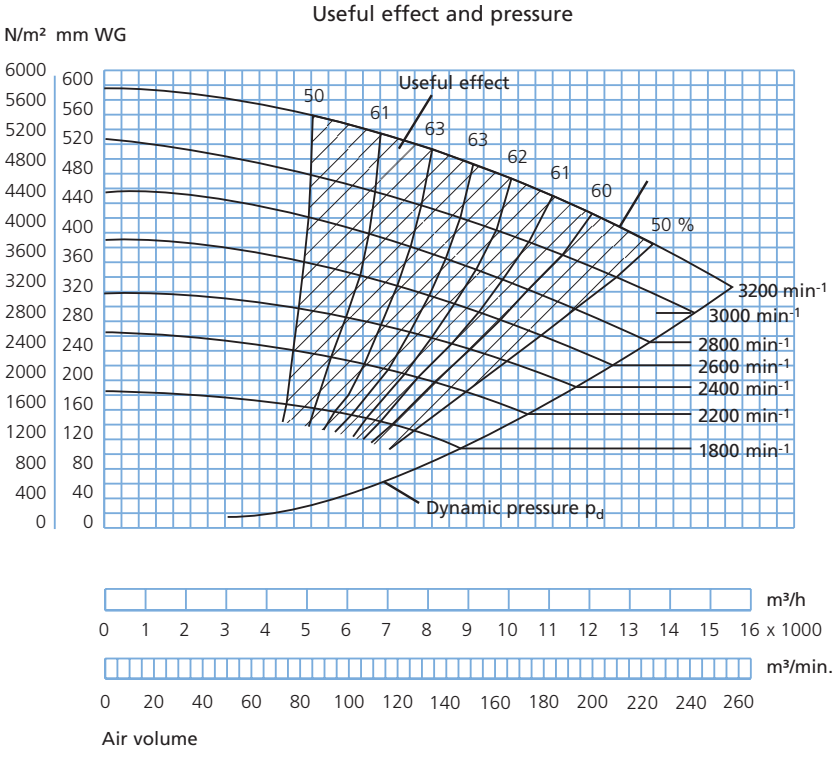

01.06.2010

Fan type JK-45K
Technical data

Motor: IP 55

Supplied with the following motors:

kW	hp	amp.	Weight of motor kg
18,5	25,0	34,4	87
22,0	30,0	40,0	165
30,0	40,0	52,5	240

Max. min^{-1}:

Standard impeller: 2.450 min^{-1}

Reinforced impeller: 1.850 min^{-1}

Operating range:

Air volume: 6.000 - 20.000 m³/h

Pressure: 180 - 520 mmWG

Power supply:

400 V - 50 Hz.

Construction:

B3 - motor mounted on foot.

Impeller:

No. of blades, standard: 8 pcs.

Diameter: ø650 mm

Height: 259 mm

The blue curve applies for 6-bladed impeller and at 1950 min^{-1}.

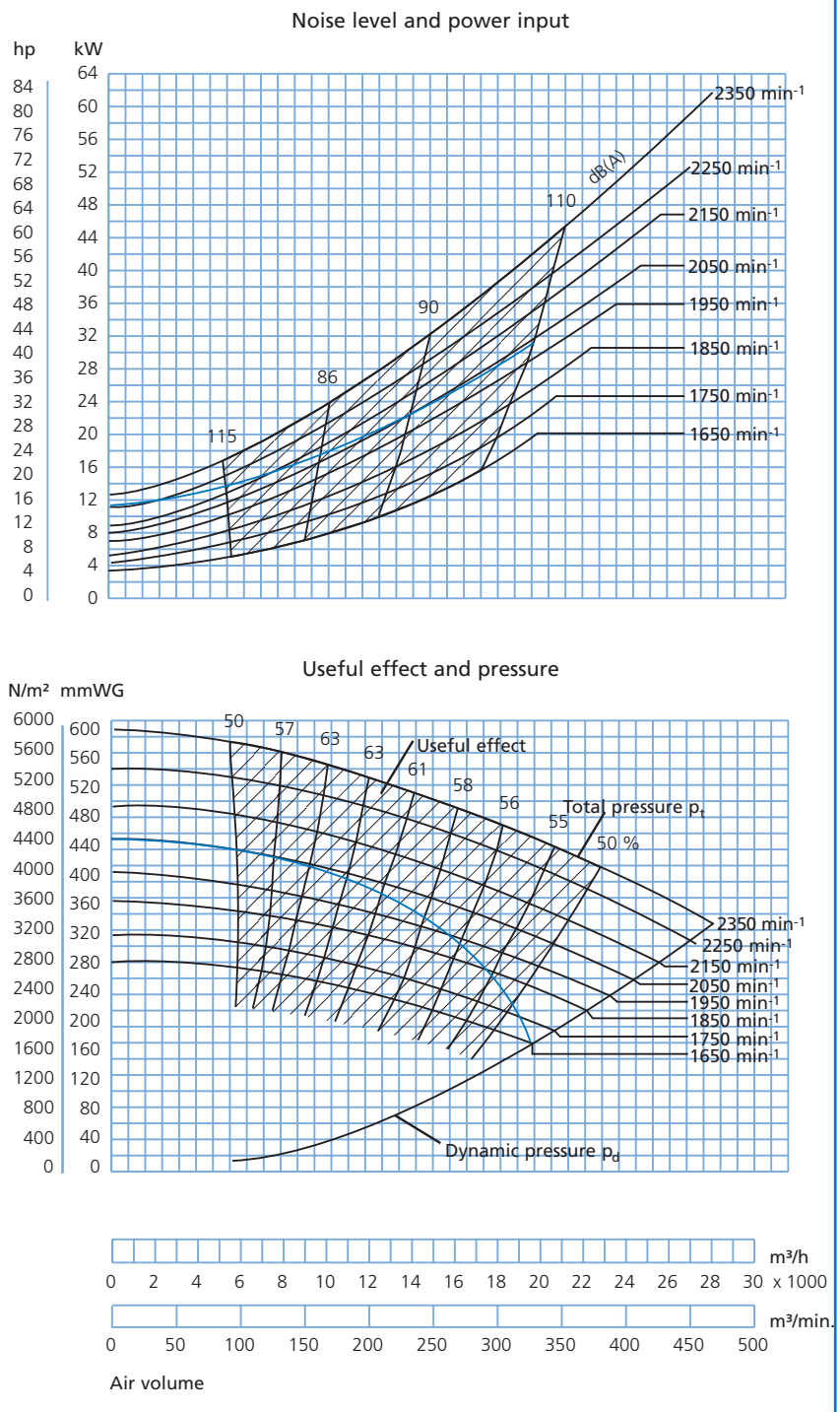

13.02.2013

Fan type JK-55K
Technical data

Motor: IP 55

Supplied with the following motors:

kW	hp	amp.	Weight of motor kg
30,0	40,0	53	230
37,0	50,0	67	300
45,0	60,0	80	330
55,0	75,0	97	435

Max. min^{-1}:

Standard impeller: 2.050 min^{-1}

Reinforced impeller: 2.050 min^{-1}

Operating range:

Air volume: 8.000 - 29.000 m³/h

Pressure: 160 - 600 mmWG

Power supply:

400 V - 50 Hz.

Construction:

B3 - motor mounted on foot.

Impeller:

No. of blades, standard: 8 pcs.

Diameter: ø800 mm

Height: 320 mm

The blue curve applies for 6-bladed impeller and at 1850 min^{-1}.

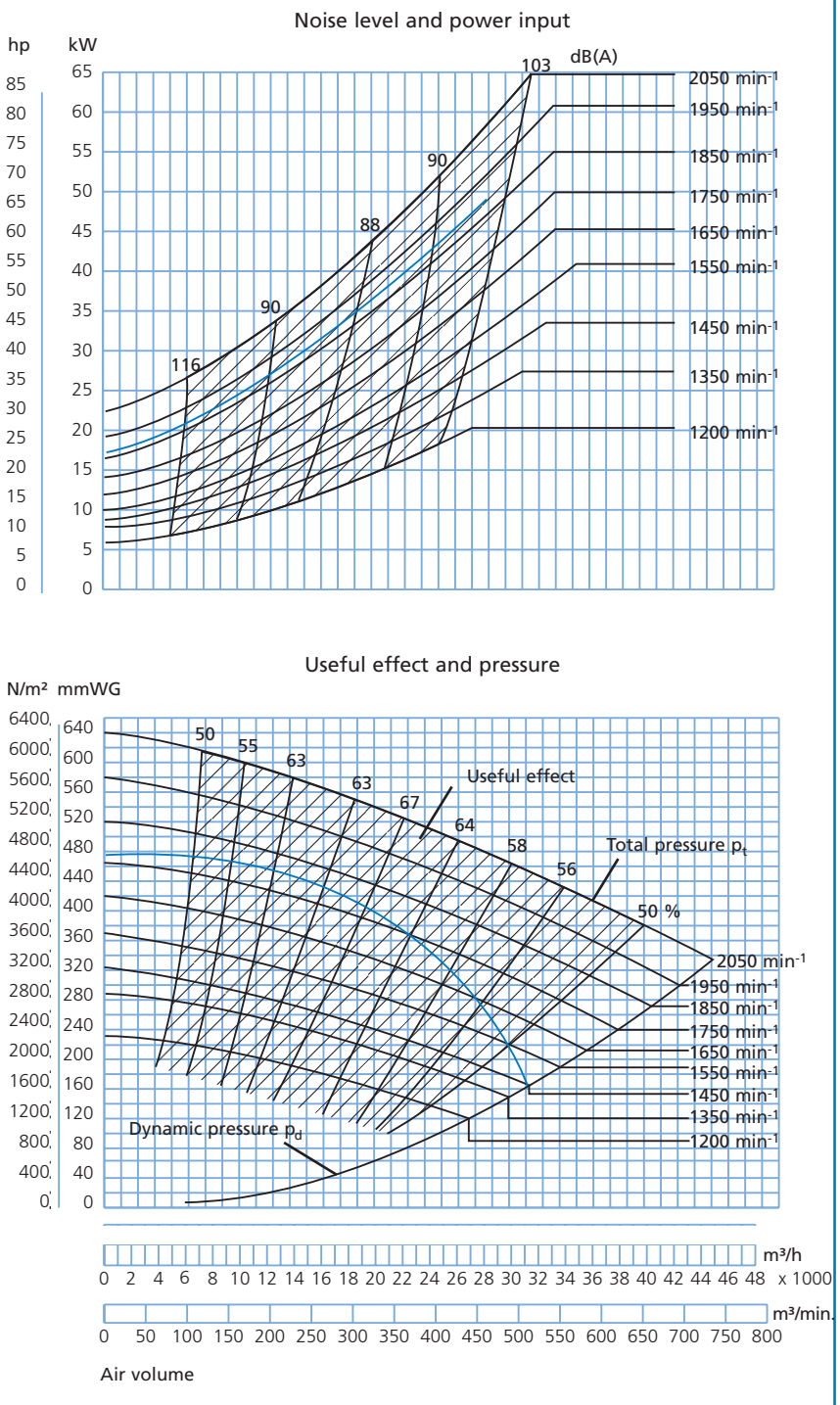

08.09.2014

Fan type JK-75K
Technical data

Motor: IP 55

Supplied with the following motors:

kW	hp	amp.	Weight of motor kg
55,0	75,0	97,0	435
75,0	103,0	133,0	610

Max. min^{-1}:

Standard impeller: 2,050 min^{-1}

Reinforced impeller: 1,450 min^{-1}

Operating range:

Air volume: 25,000 – 40,000 m³/h

Pressure: 200 – 370 mm WG

Power supply:

400 V - 50 Hz.

Construction:

B3 - motor mounted on foot.

Impeller:

No. of blades, standard: 8 pcs.

Diameter: ø890 mm

Height: 430 mm

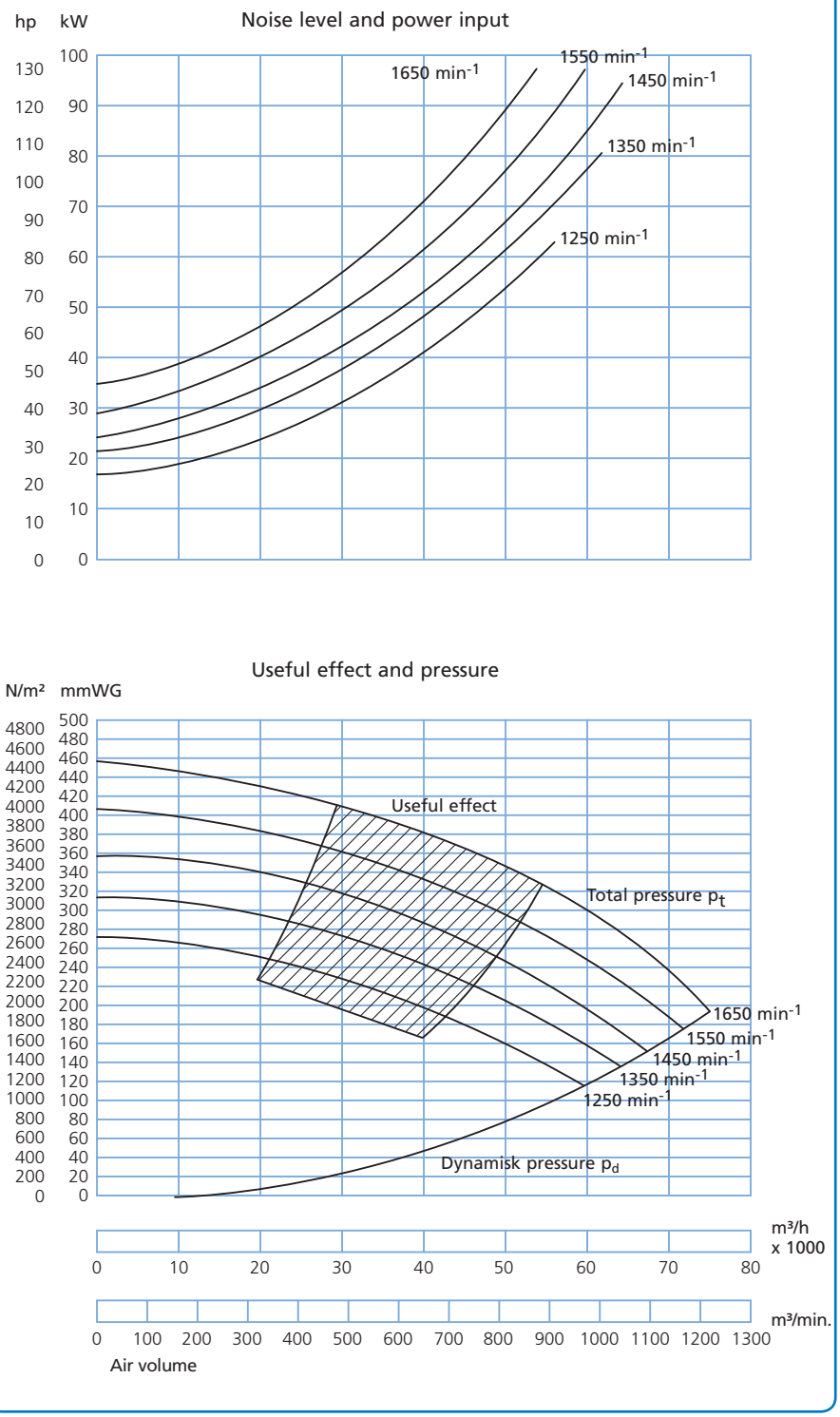

12.11.2012

Fan type T-200D/K – T-500D/K

The indirect driven centrifugal fan types T-200K – T-500K and direct driven fan types T-200D – T-500D is designed for concentrated material handling over long distances.

The impellers are available in 2 versions, an open T-impeller for coarse-grained or rather long material types and a closed P-impeller for dust particles (< 2 mm).
The impeller for paper is always made as open T-impeller with 6 blades.
T-impeller is available in wear-resistant material HARDOX.
The impeller is statically and dynamically balanced.
The fan is available in anti-spark version with stainless steel inlet and explosion-proof (Eex) motor.

The pulleys are fitted with taperlock. This means that they can be easily re-placed if the number of revolutions has to be changed.

Max. operating temperature: 60°C
With cooling wings: Up to 200°C (only K-models)

Dimensions (D) for the inlet are external, and is supplied smooth on T-200 and T-300 and with flange on T-400 and T-500.

Specific dimensions for the outlet flanges can be found under "Flanges".

The technical data for each type appears on the following pages.
Effects measured according to ISO 5801.

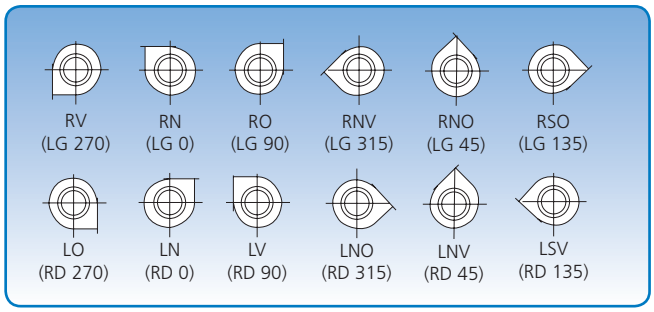

6 positions. The position illustrations are viewed from the inlet side.

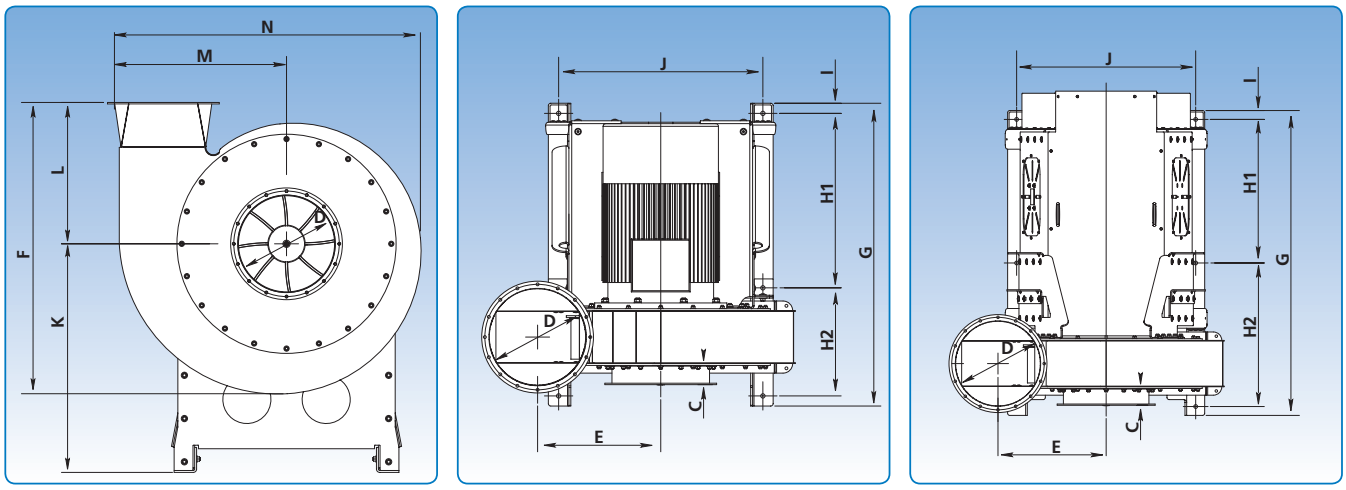

T-D

Type	Dimensions													Weight without motor kg
	C mm	D mm	E mm	F mm	G mm	H1 mm	H2 mm	I mm	J mm	K mm	L mm	M mm	N mm	
T-200K	100	200	352	896	1099	506	506	42	671	720	496	454	834	257
T-300K	75	300	380	1076	1255	584	584	42	786	860	591	533	971	371
T-400K	106	400	514	1212	1436	676	676	42	850	1008	588	716	1273	627
T-500K	215	500	522	1361	1668	792	792	42	932	1193	693	774	1366	677
T-200D	100	200	352	896	934	305	545	38	671	720	496	454	834	219
T-300D	75	300	380	1076	1110	366	660	38	760	860	591	533	971	328
T-400D	106	400	514	1212	1208	398	726	37	850	1008	588	716	1273	529
T-500D	215	500	522	1361	1535	450	1001	37	850	1193	693	774	1366	646

04.02.2015

Fan type T-200K and T-200D
Technical data

Motor: IP 55

Fan T-200K

Supplied with the following motors:

kW	amp.	Weight of motor kg
11,0	21,2	64
15,0	27,5	83
18,5	34,4	87
22,0	40,0	165

Fan T-200D

Supplied with the following motors:

kW	amp.	Weight of motor kg
11,0	21,2	69
15,0	27,5	83
18,5	34,4	87
22,0	39,0	180

Max. min^{-1}:

Standard impeller: 2.940 min.$^{-1}$

Reinforced impeller: 2.850 min.$^{-1}$

Operating range T-impeller:

Air volume: 800 - 5.200 m³/h

Pressure: 2.150 - 7.850 Pa

Power supply:

3 x 400 V - 50 Hz.

Construction T-200K:

B3 - motor mounted on foot.

Construction T-200D:

B35 - motor mounted with food and flange.

T-impeller:

No. of blades, standard: 8 pcs.

Diameter: ø650 mm

Height: 120 mm

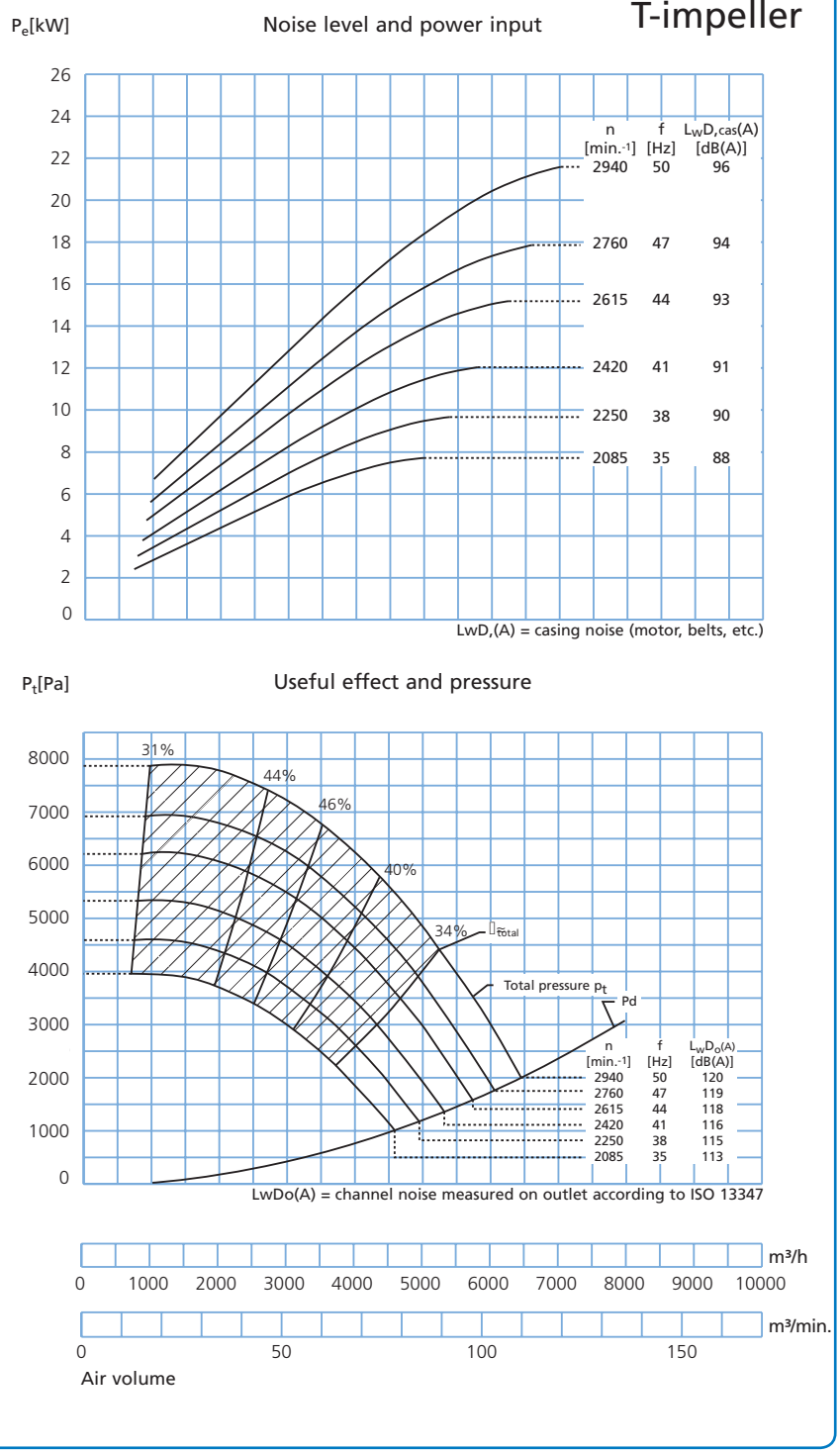

04.02.2015

Fan type T-200K and T-200D
Technical data

Motor: IP 55

Fan T-200K

Supplied with the following motors::

kW	amp.	Weight of motor kg
11,0	21,2	64
15,0	27,5	83
18,5	34,4	87
22,0	40,0	165

Fan T-200D

Supplied with the following motors:

kW	amp.	Weight of motor kg
11,0	21,2	69
15,0	27,5	83
18,5	34,4	87
22,0	39,0	180

Max. min^{-1}:

Impeller: 2.940 min.$^{-1}$

Operating range P-impeller:

Air volume: 1.000 - 6.500 m³/h

Pressure: 1.850 - 8.350 Pa

Power supply:

3 x 400 V - 50 Hz.

Construction T-200K:

B3 - motor mounted on foot.

Construction T-200D:

B35 - motor mounted with food and flange.

P-impeller:

No. of blades, standard: 8 pcs.

Diameter: ø654 mm

Height: 131 mm

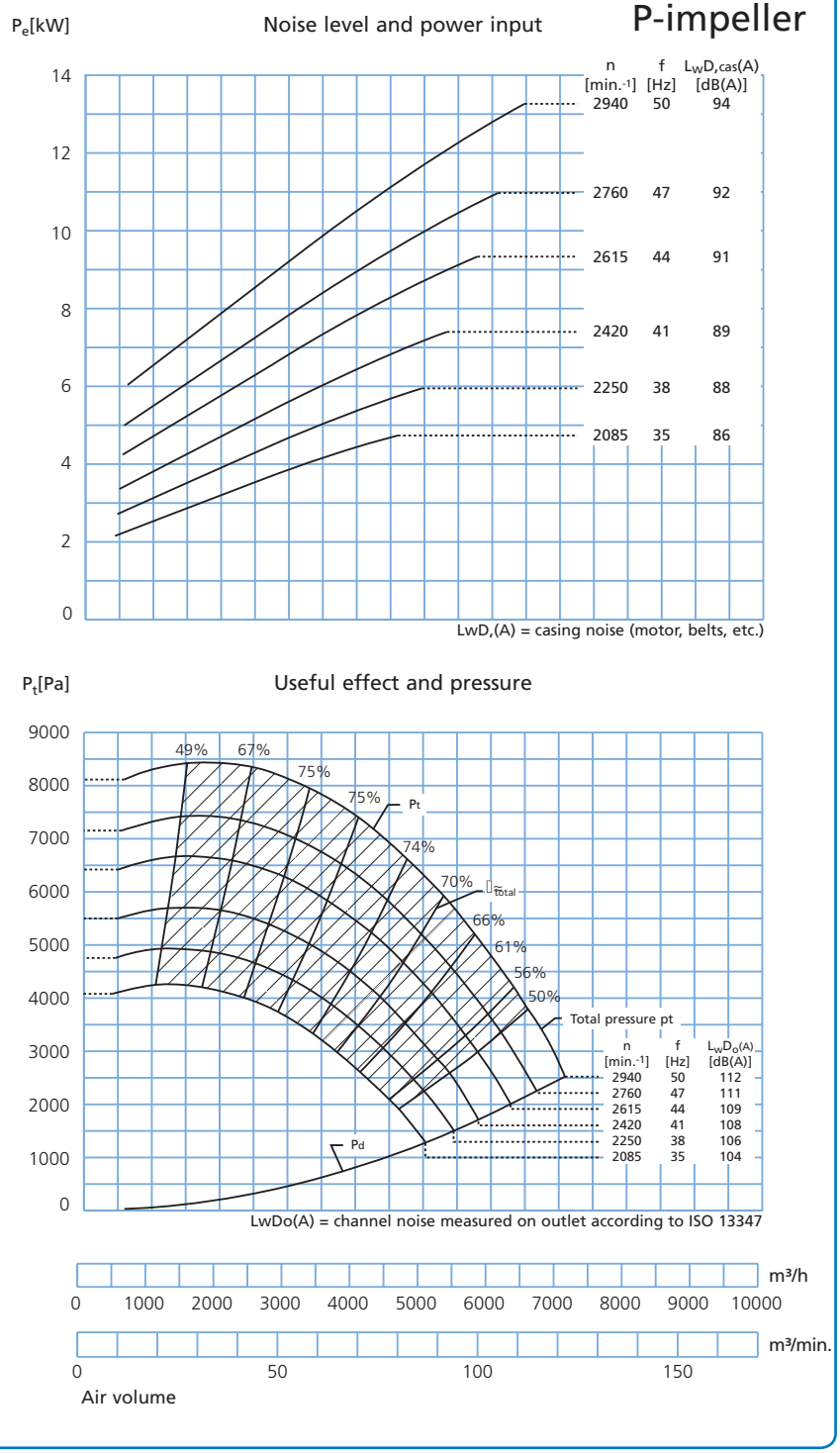

19.09.2013

Fan type T-300K and T-300D
Technical data

Motor: IP 55

Fan T-300K

Supplied with the following motors:

kW	amp.	Weight of motor kg
22,0	39,0	180
30,0	52,3	246
37,0	64,5	256
45,0	78,0	328

Fan T-300D

Supplied with the following motors:

kW	amp.	Weight of motor kg
30,0	52,3	246
37,0	64,5	256
45,0	78,0	328

Max. min-1:

Standard impeller: 2.940 min.-1

Reinforces impeller: 2,400 min.-1

Operating range T-impeller:

Air volume: 2.000 - 11.000 m³/h

Pressure: 3.500 - 10.800 Pa

Power supply:

3 x 400 V - 50 Hz.

Construction T-300K:

B3 - motor mounted on foot.

Construction T-300D:

B35 - motor mounted with food and flange.

T-impeller:

No. of blades, standard: 8 pcs.

Diameter: ø735 mm

Height: 130 mm

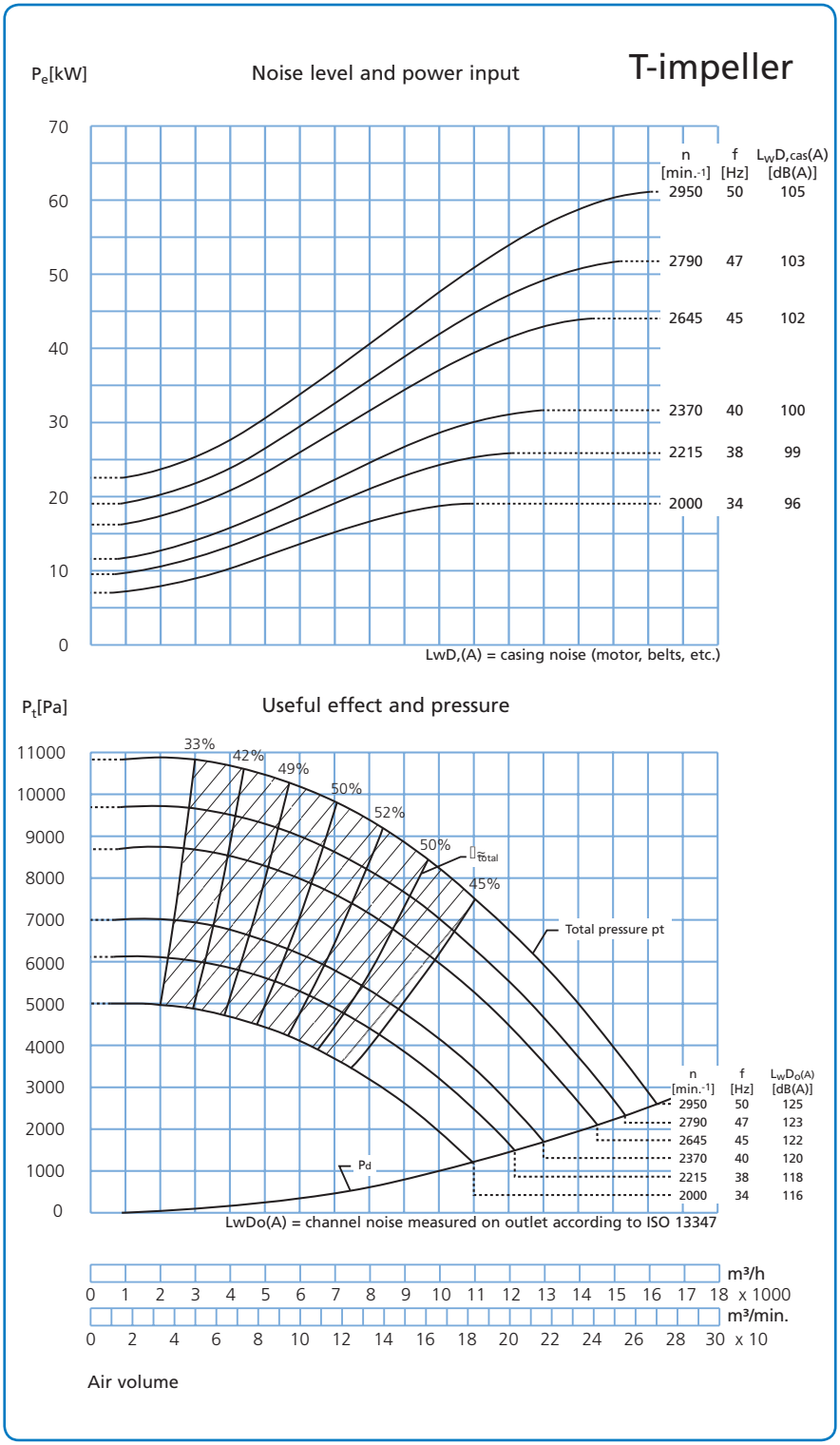

19.09.2013

Fan type T-300K and T-300D
Technical data

Motor: IP 55

Fan T-300K

Supplied with the following motors:

kW	amp.	Weight of motor kg
22,0	39,0	180
30,0	52,3	246
37,0	64,5	256
45,0	78,0	328

Fan T-300D

Supplied with the following motors:

kW	amp.	Weight of motor kg
30,0	52,3	246
37,0	64,5	256
45,0	78,0	328

Max. min^{-1}:

Impeller: 2.950 min.$^{-1}$

Operating range P-impeller:

Air volume: 2.000 - 14.000 m³/h

Pressure: 2.500 - 10.800 Pa

Power supply:

3 x 400 V - 50 Hz.

Construction T-300K:

B3 - motor mounted on foot.

Construction T-300D:

B35 - motor mounted with food and flange.

P-impeller:

No. of blades, standard: 8 pcs.

Diameter: ø740 mm

Height: 177 mm

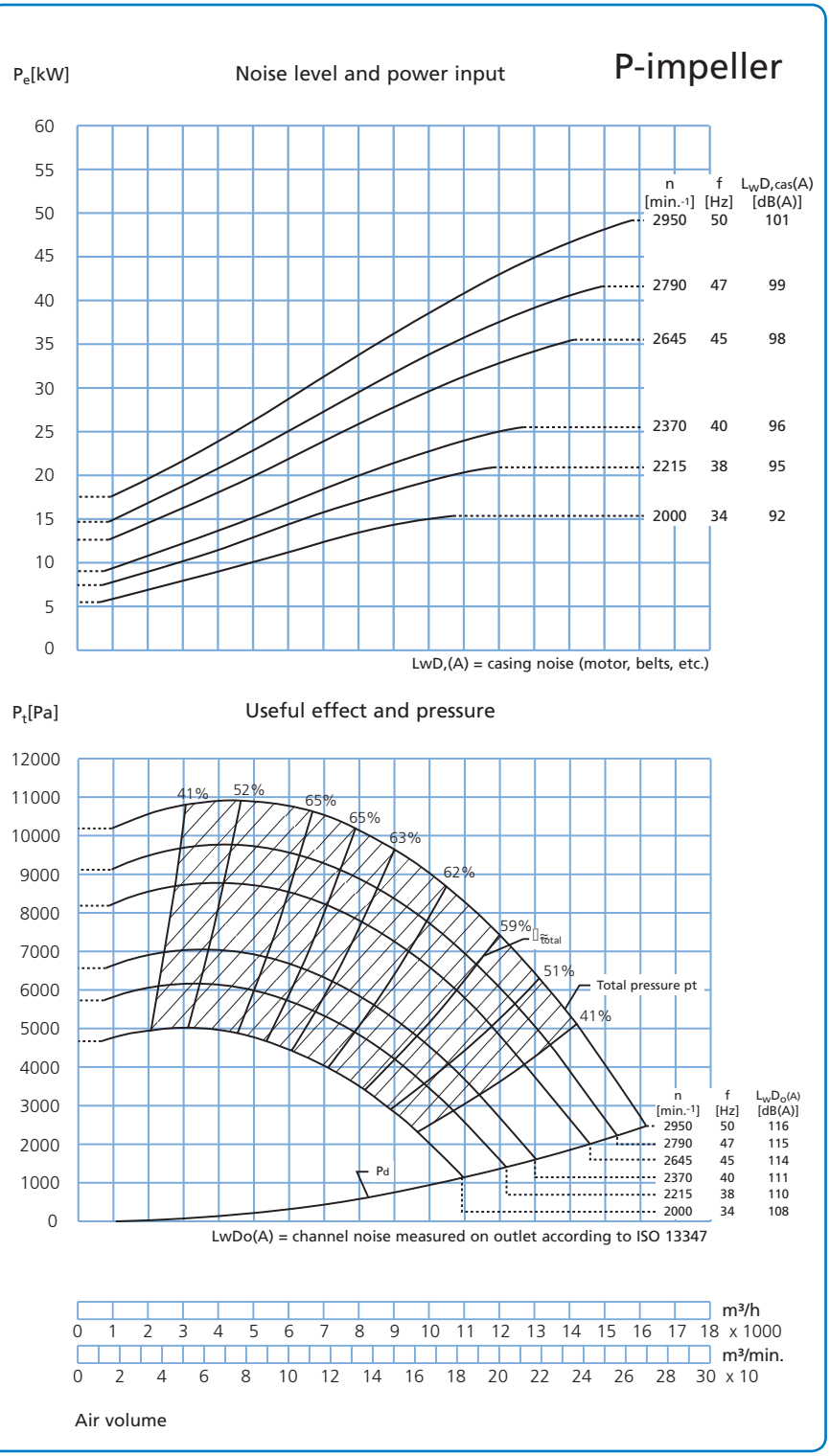

19.09.2013

Fan type T-400K and T-400D
Technical data

Motor: IP 55

Fan T-400K

Supplied with the following motors:

kW	amp.	Weight of motor kg
37,0	65,9	305
45,0	78,0	328
55,0	95,4	452
75,0	129,0	592

Fan T-400T

Supplied with the following motors:

kW	amp.	Weight of motor kg
55,0	95,4	452
75,0	129,0	592

Max. min^{-1}:

Impeller: 2.955 min.$^{-1}$

Operating range T-impeller:

Air volume: 2.500 - 17.000 m³/h

Pressure: 3.500 - 11.700 Pa

Power supply:

3 x 400 V - 50 Hz.

Construction T-400K:

B3 - motor mounted on foot.

Construction T-400D:

B35 - motor mounted with food and flange.

T-impeller:

No. of blades, standard: 8 pcs.

Diameter: ø786 mm

Height: 199 mm

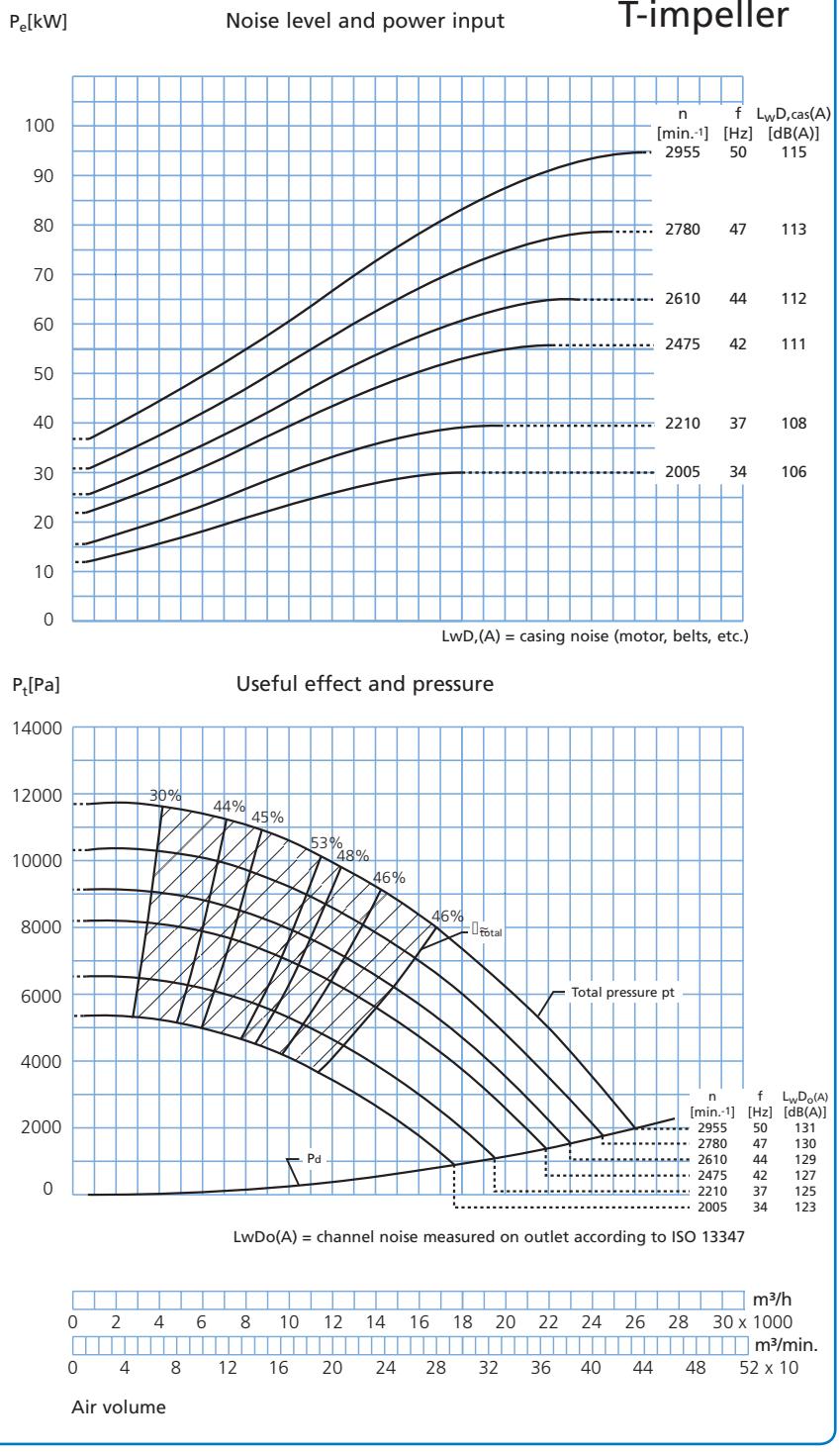

19.09.2013

Fan type T-400K and T-400D
Technical data

Motor: IP 55

Fan T-400K

Supplied with the following motors:

kW	amp.	Weight of motor kg
37,0	65,9	305
45,0	78,0	328
55,0	95,4	452
75,0	129,0	592

Fan T-400D

Supplied with the following motors:

kW	amp.	Weight of motor kg
55,0	95,4	452
75,0	127,0	592

Max. min^{-1}:

Impeller: 2.955 min.$^{-1}$

Operating range P-impeller::

Air volume: 4.000 - 23.000 m³/h

Pressure: 2.200 - 11.000 Pa

Power supply:

3 x 400 V - 50 Hz.

Construction T-400K:

B3 - motor mounted on foot.

Construction T-400D:

B35 - motor mounted with food and flange.

P-impeller:

No. of blades, standard: 8 pcs.

Diameter: ø769 mm

Height: 240 mm

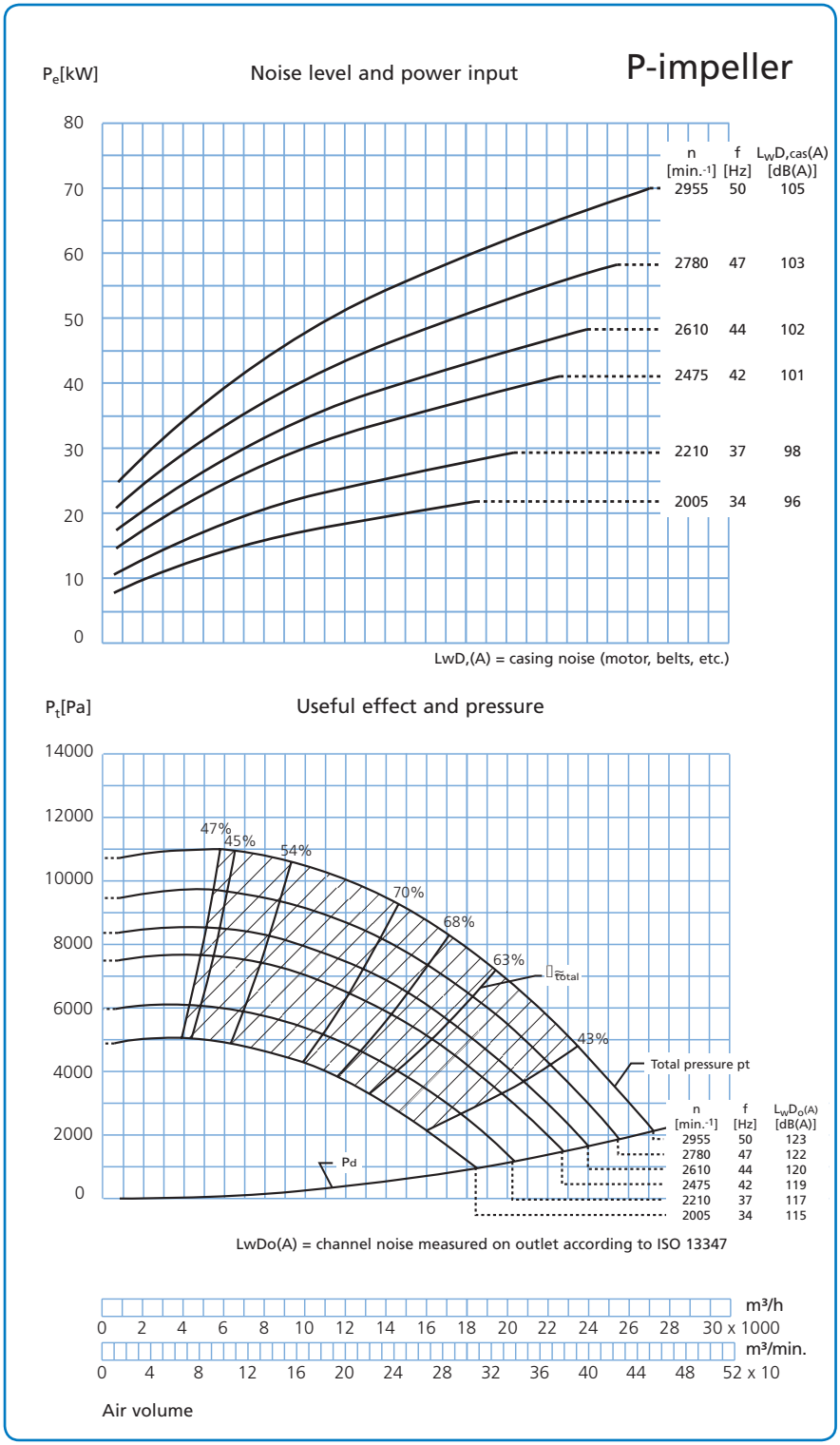

26.09.2013

Fan type T-500K and T-500D
Technical data

Motor: IP 55

Fan T-500K

Supplied with the following motors::

kW	amp.	Weight of motor kg
75,0	129,0	592
90,0	155,0	672
110,0	189,0	980

Fan T-500D

Supplied with the following motors::

kW	amp.	Weight of motor kg
75,0	129,0	592
90,0	155,0	672
110,0	185,0	950

Max. min^{-1}:

Impeller: 2.955 min.$^{-1}$

Operating range T-impeller:

Air volume: 3.000 - 25.000 m³/h

Pressure: 3.700 - 12.800 Pa

Power supply:

3 x 400 V - 50 Hz.

Construction T-500K:

B3 - motor mounted on foot.

Construction T-500D:

B35 - motor mounted with food and flange.

T-impeller:

No. of blades, standard: 8 pcs.

Diameter: ø805 mm

Height: 250 mm

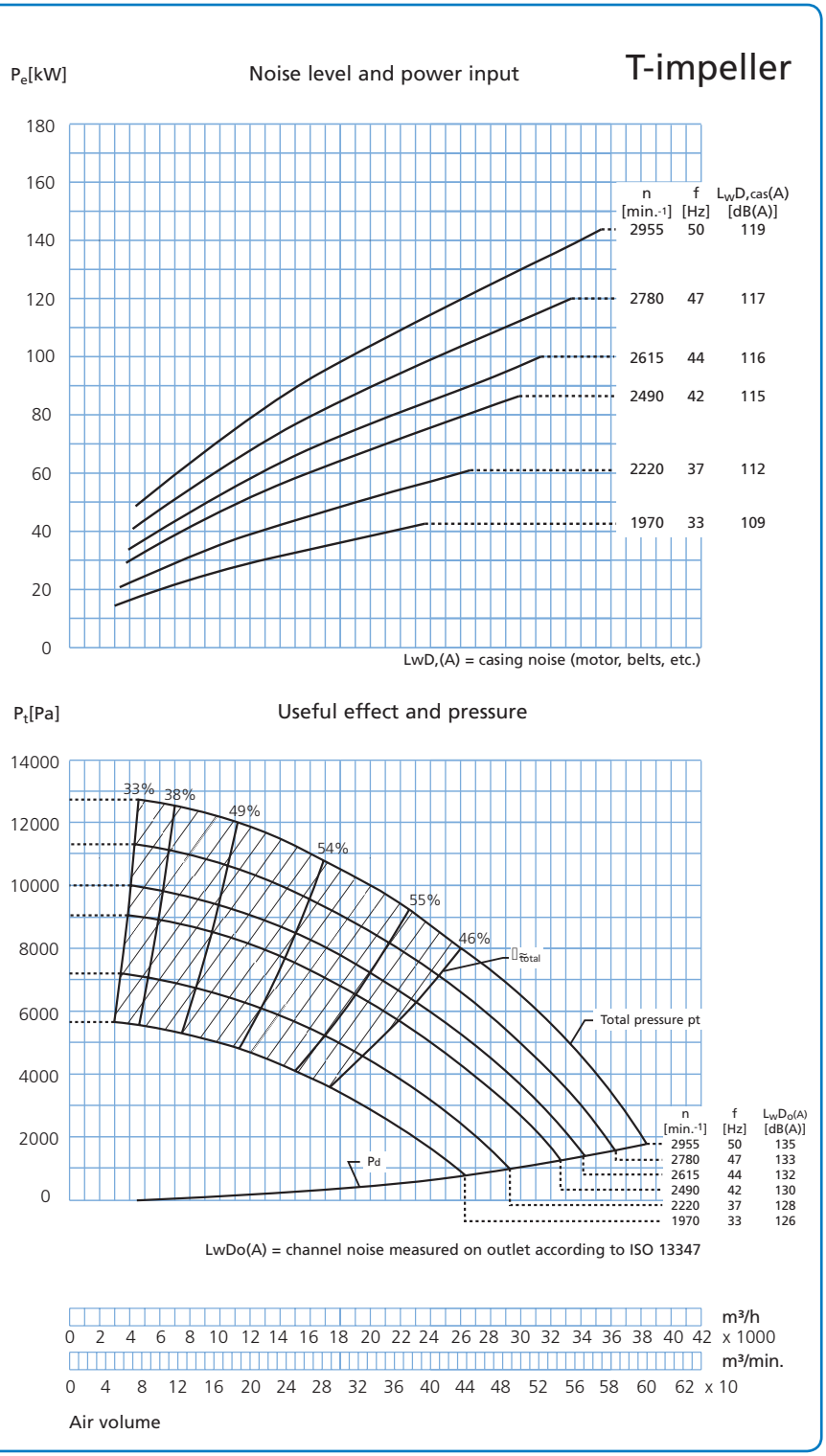

26.09.2013

Fan type T-500K and T-500D
Technical data

Motor: IP 55

Fan T-500K

Supplied with the following motors:

kW	amp.	Weight of motor kg
75	129	592
90	155	672
110	189	980

Fan T-500D

Supplied with the following motors:

kW	amp.	Weight of motor kg
75	129	592
90	155	672
110	185	950

Max. min^{-1}:

Impeller: 2.955 min.$^{-1}$

Operating range P-impeller:

Air volume: 5.000 - 37.000 m³/h

Pressure: 1.000 - 11.700 Pa

Power supply:

3 x 400 V - 50 Hz.

Construction T-500K:

B3 - motor mounted on foot.

Construction T-500D:

B35 - motor mounted with food and flange.

P-impeller:

No. of blades, standard: 8 pcs.

Diameter: ø805 mm

Height : 285 mm

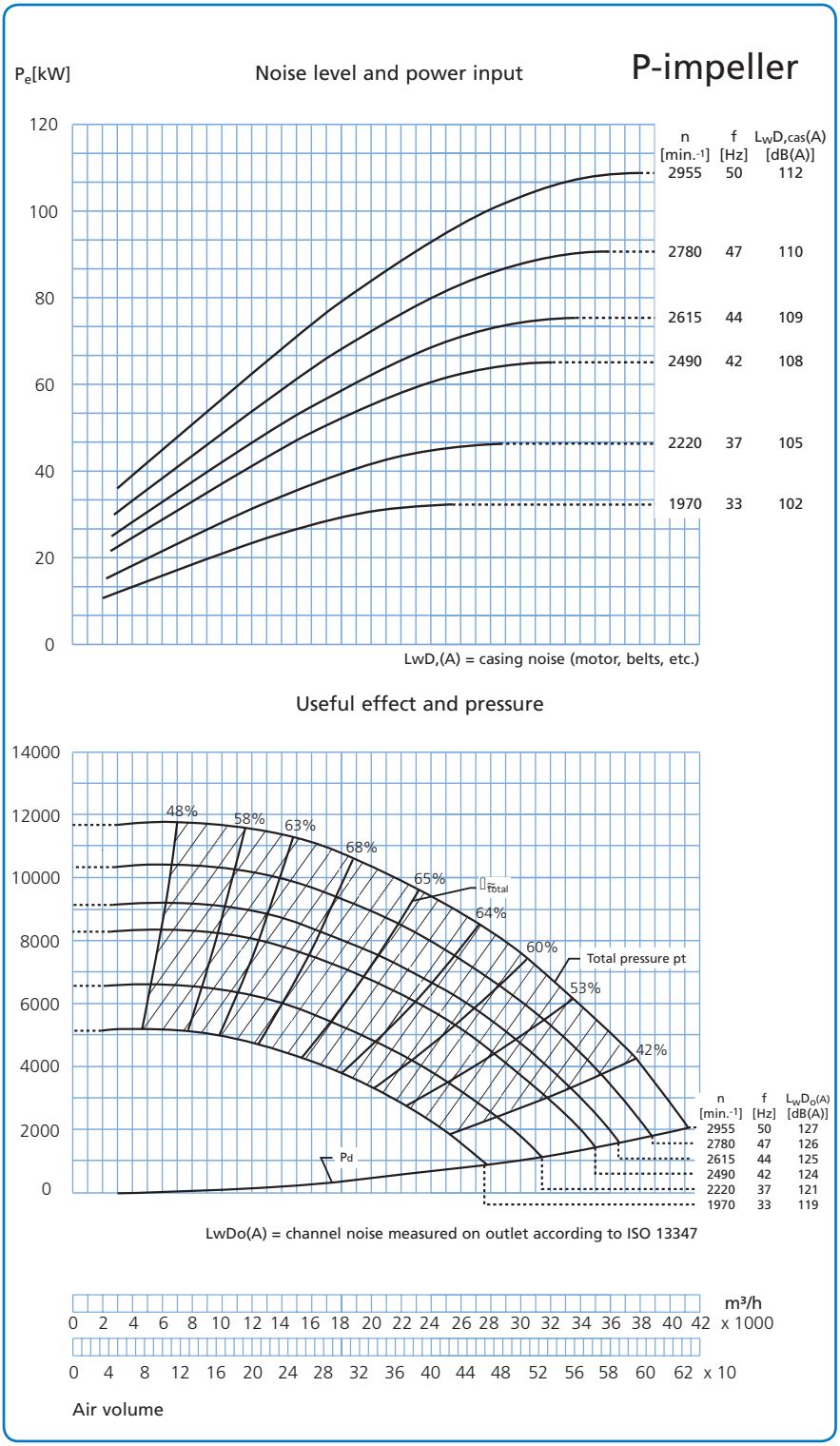

18.04.2017

Fan types
JK-30MTDP – JK-40MTDP – JK-50MTDP

The direct drive centrifugal fan types JK-30MTDP, JK-40MTDP and JK-50MTDP are designed for material transport, e.g. wood chips and dust.

Equipped with backward-inclined blades and aerodynamic inlet spigot made from brass.

The impellers are statically and dynamically balanced according to ISO 10816-3.

Normally, a frequency transformer is used to control the min^{-1} and the air volume of the fan.

Max. operating temperature: 60°C

The inlet (D) is supplied with flange as standard.

Specific dimensions for the outlet and inlet flanges can be found under "Flanges".

The technical data for each type appears on the following pages.

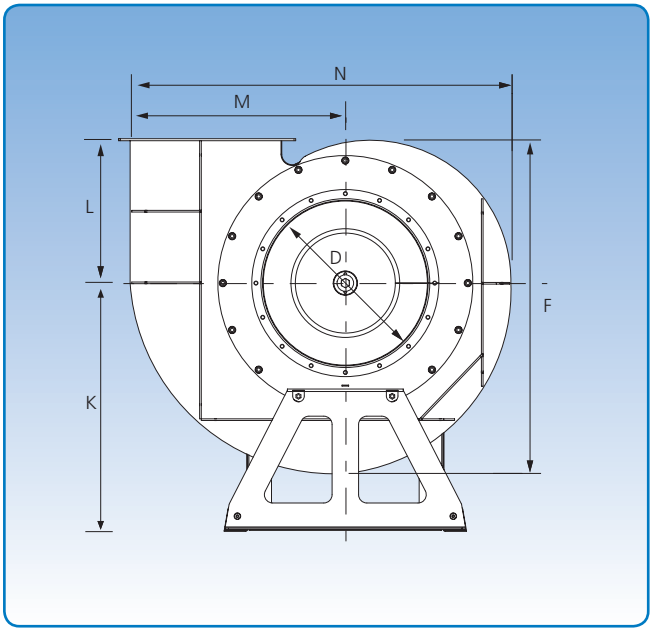

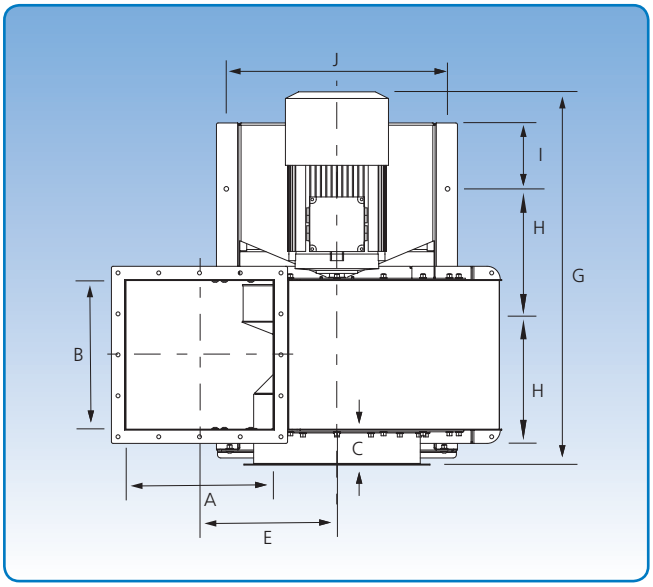

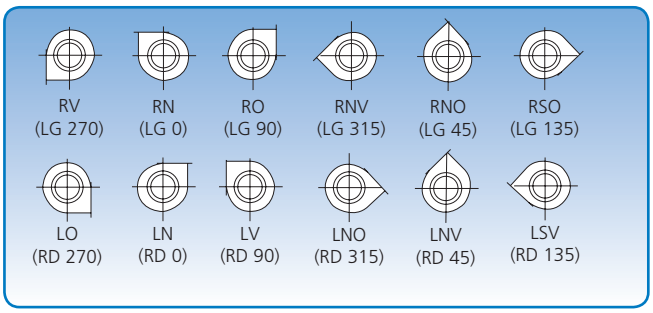

12 positions. The position illustrations are viewed from the inlet side.

Dimensions

Type	A mm	B mm	C mm	D mm	E mm	F mm	G mm	H mm	I mm	J mm	K mm	L mm	M mm	N mm	Weight without motor kg
JK-30MTDP	250	250	106	300	318	645	733	275	51	430	550	276	450	768	74
JK-40MTDP	350	350	106	400	368	779	903	370	49	550	650	326	550	1098	106
JK-50MTDP	450	450	106	500	416	1012	1128	370	199	672	750	436	643	1146	184

18.04.2017

Fan type JK-30MTDP
Technical data

Motor: IP 55

Supplied with the following motors:

kW	amp.	Weight of motor kg	50 Hz
4,0	7,2	34	2920 min^{-1}

Max. min^{-1}:

Impeller: 3.000 min^{-1}

Operating range:

Air volume: 2.000 - 6.000 m³/h

Pressure: 150 - 250 mmWG

Power supply:

230/400 V

Construction:

B3 – motor mounted on foot.

Impeller:

No. of blades, standard: 6 pcs.

Diameter: ø405 mm

Height: 189 mm

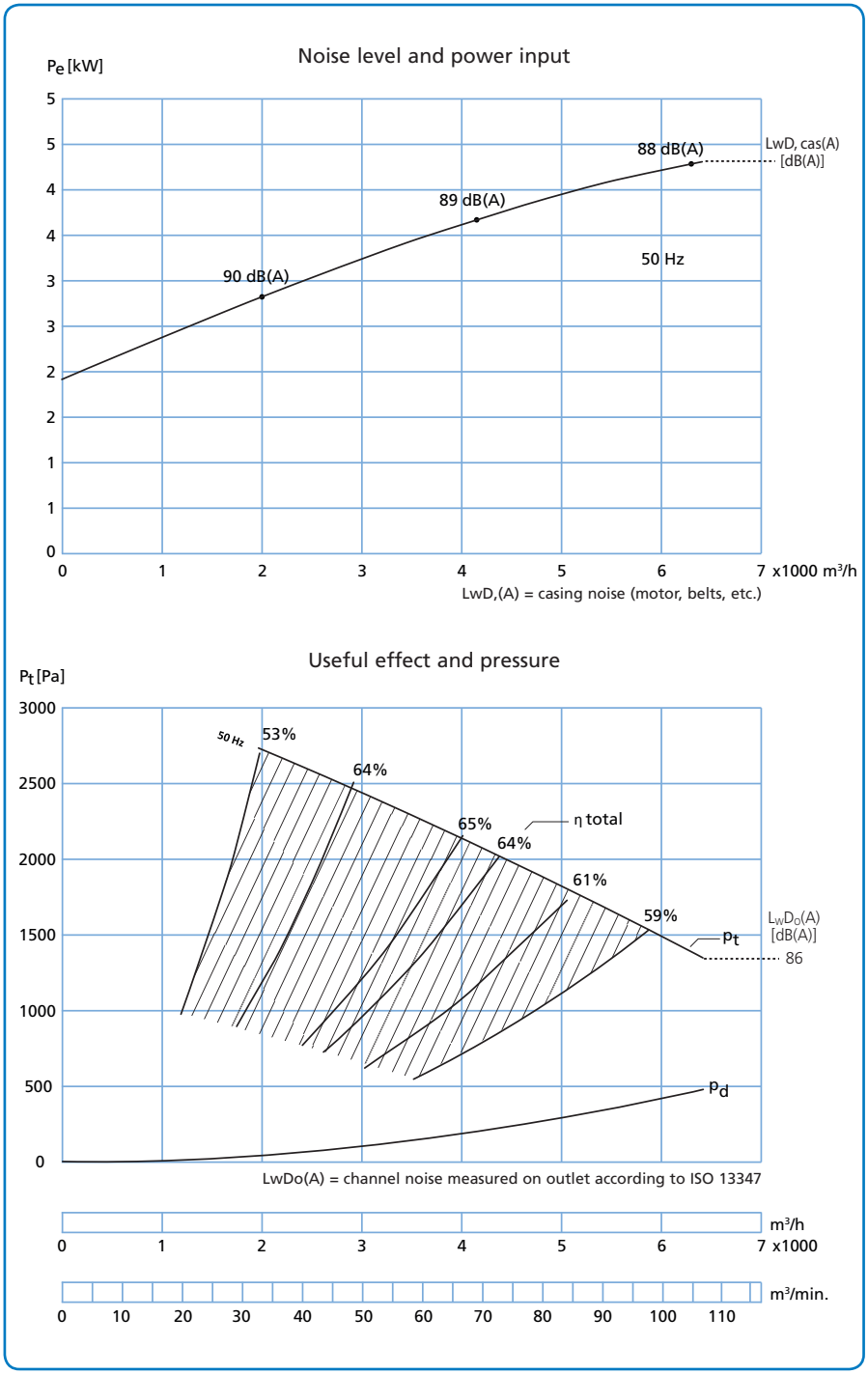

18.04.2017

Fan type JK-40MTDP
Technical data

Motor: IP 55

Supplied with the following motors:

kW	amp.	Weight of motor kg	50 Hz
11,0	19,5	128	2950 min^{-1}

Max. min^{-1}:

Impeller: 3,000 min^{-1}

Operating range:

Air volume: 5,500 – 10,500 m³/h

Pressure: 165 – 365 mm WG

Power supply:

230/400 V

Construction:

B3 – motor mounted on foot.

Impeller:

No. of blades, standard: 6 pcs.

Diameter: ø495 mm

Height: 231 mm

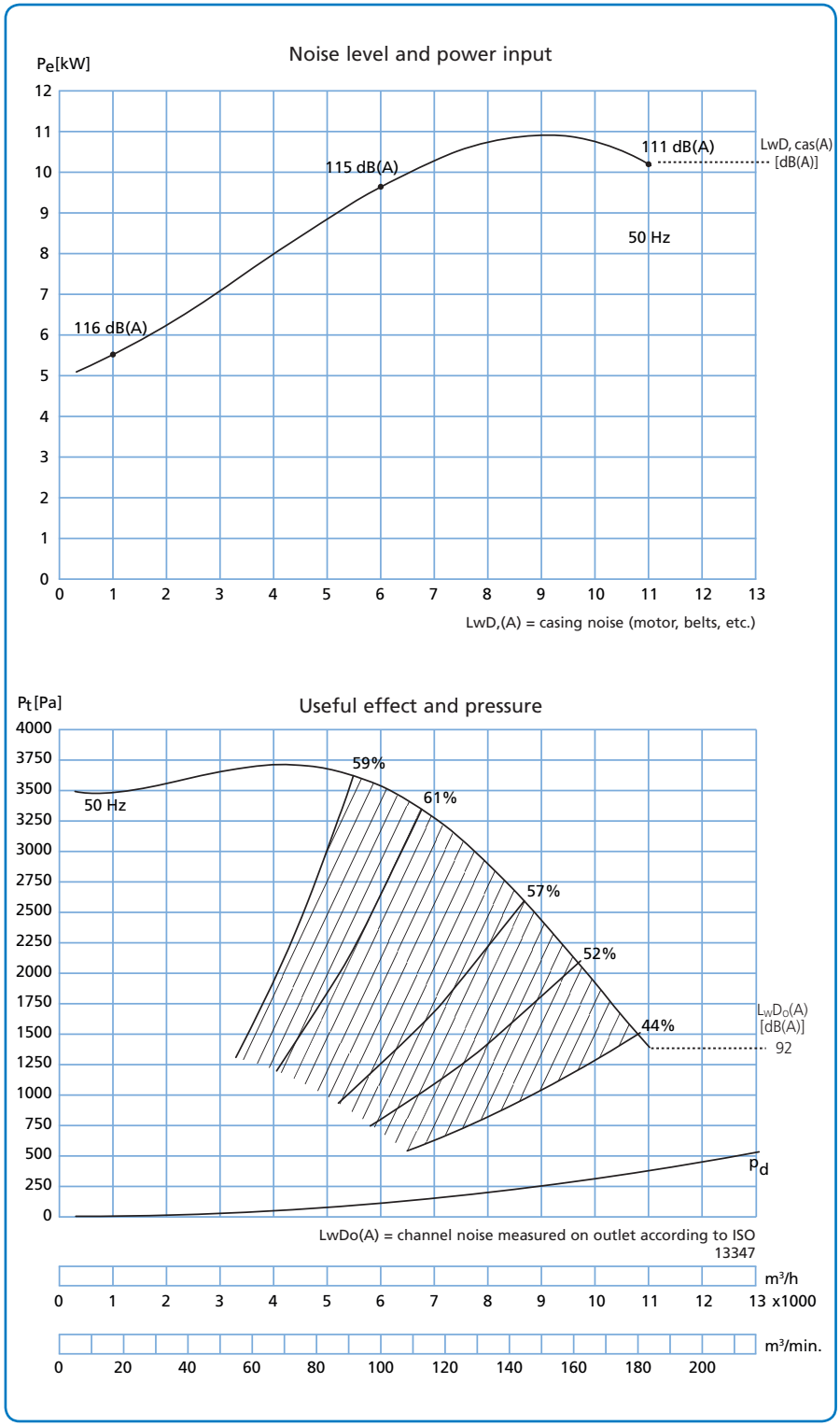

18.04.2017

Fan type JK-50MTDP
Technical data

Motor: IP 55

Supplied with the following motors:

kW	amp.	Weight of motor kg	50 Hz
22,0	38,0	192	2965 min^{-1}

Max. min^{-1}:

Impeller: 3,000 min^{-1}

Operating range:

Air volume: 8,000 – 16,000 m³/h

Pressure: 230 – 500 mm WG

Power supply:

230/400 V

Construction:

B3 – motor mounted on foot.

Impeller:

No. of blades, standard: 8 pcs.

Diameter: ø556 mm

Height: 268 mm

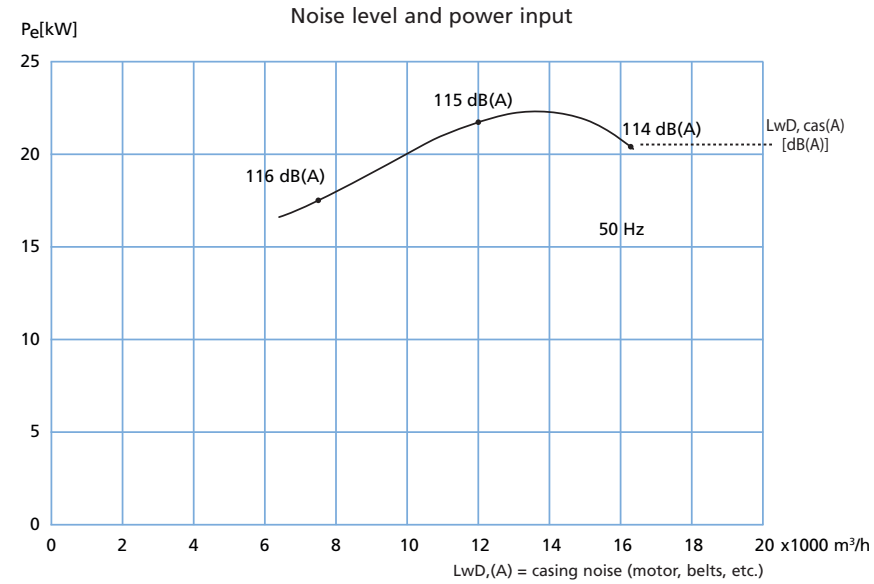

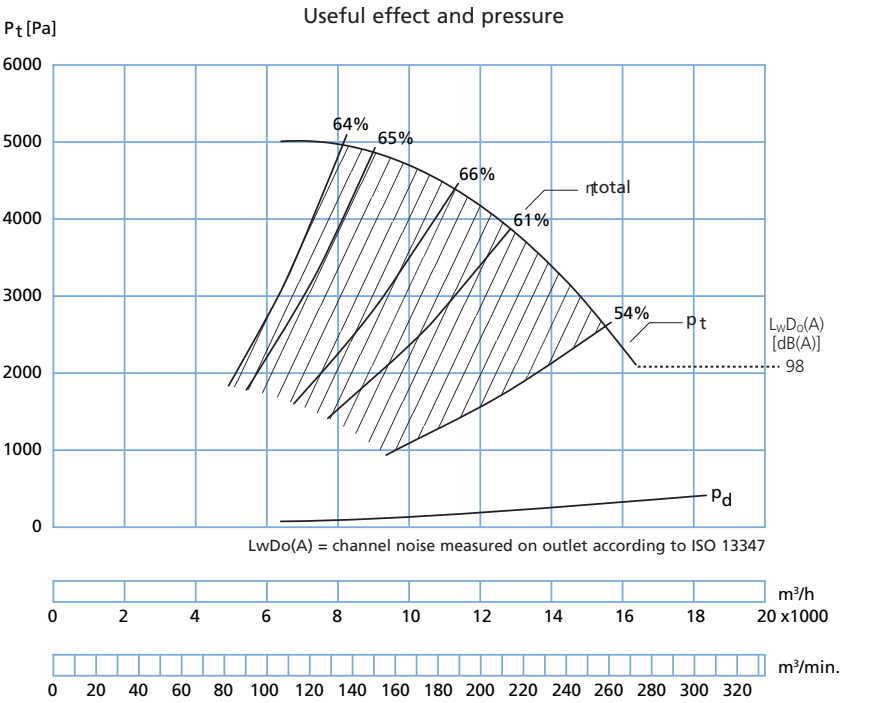

18.04.2017

Fan types
JK-60MTDP – JK-70MTDP – JK-80MTDP – JK-90MTDP

The direct drive centrifugal fan types JK-60MTDP, JK-70MTDP, JK-80MTDP and JK-90MTDP are designed for material transport, e.g. wood chips and dust.

Equipped with backward-inclined blades and aerodynamic inlet spigot made from brass.

The impellers are statically and dynamically balanced according to ISO 10816-3.

Max. operating temperature: 60°C

The inlet (D) is supplied with flange as standard.

Specific dimensions for the outlet and inlet flanges can be found under "Flanges".

The technical data for each type appears on the following pages.

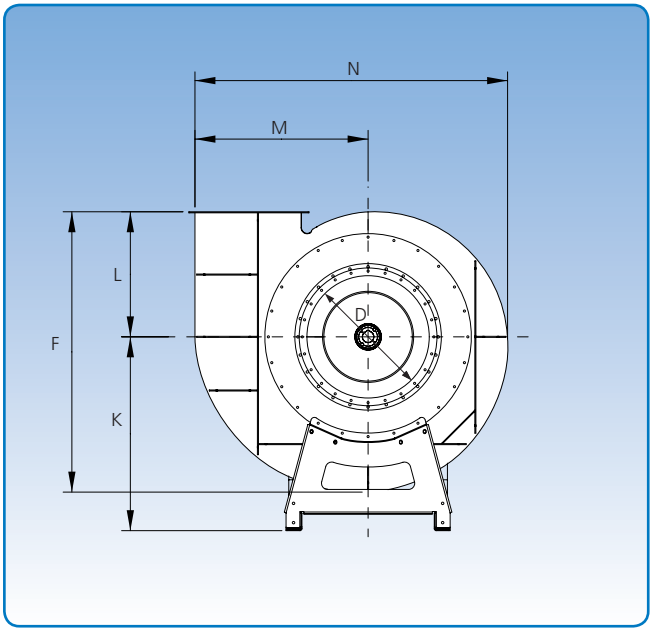

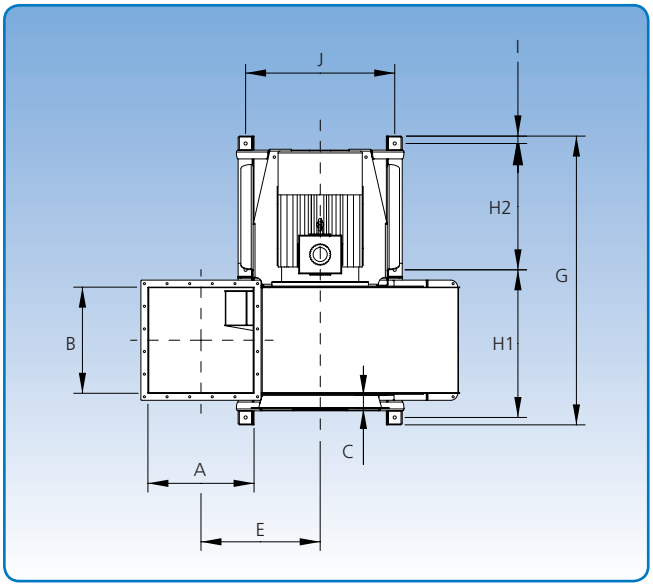

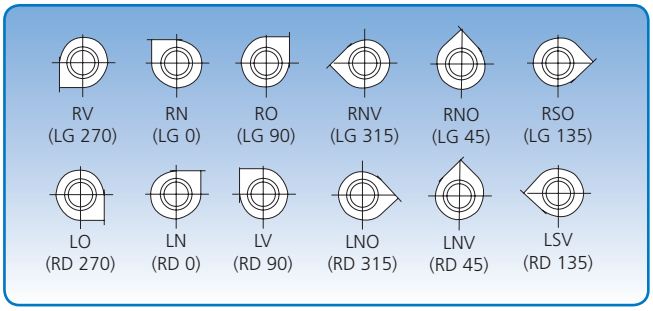

12 positions. The position illustrations are viewed from the inlet side.

Dimensions

Type	A mm	B mm	C mm	D mm	E mm	F mm	G mm	H1 mm	H2 mm	I mm	J mm	K mm	L mm	M mm	N mm	Weight without motor kg
JK-60MTDP	505	505	75	600	655	1515	1481	742	655	42	850	1032	685	906	1659	455
JK-70MTDP	605	605	75	700	680	1598	1646	842	720	42	850	1105	713	979	1773	521
JK-80MTDP	705	705	75	800	711	1691	1821	942	795	42	1000	1188	744	1062	1901	610
JK-90MTDP	805	805	75	900	718	1762	1990	1071	832	44	1264	1264	771	1120	1994	777

18.04.2017

Fan type JK-60MTDP
Technical data

Motor: IP 55

Supplied with the following motors:

kW	amp.	Weight of motor kg	50 Hz
45,0	77,0	345	1480 min^{-1}

Max. min^{-1}:

Standard impeller: 1,500 min^{-1}.

Operating range:

Air volume: 11,000 - 32,000 m³/h

Pressure: 310 - 560 mmWG

Power supply:

3 × 400 V.

Construction:

B3/B5 - motor mounted on foot and flange.

Impeller:

No. of blades, standard: 8 pcs.

Diameter: ø1048 mm

Height: 318 mm

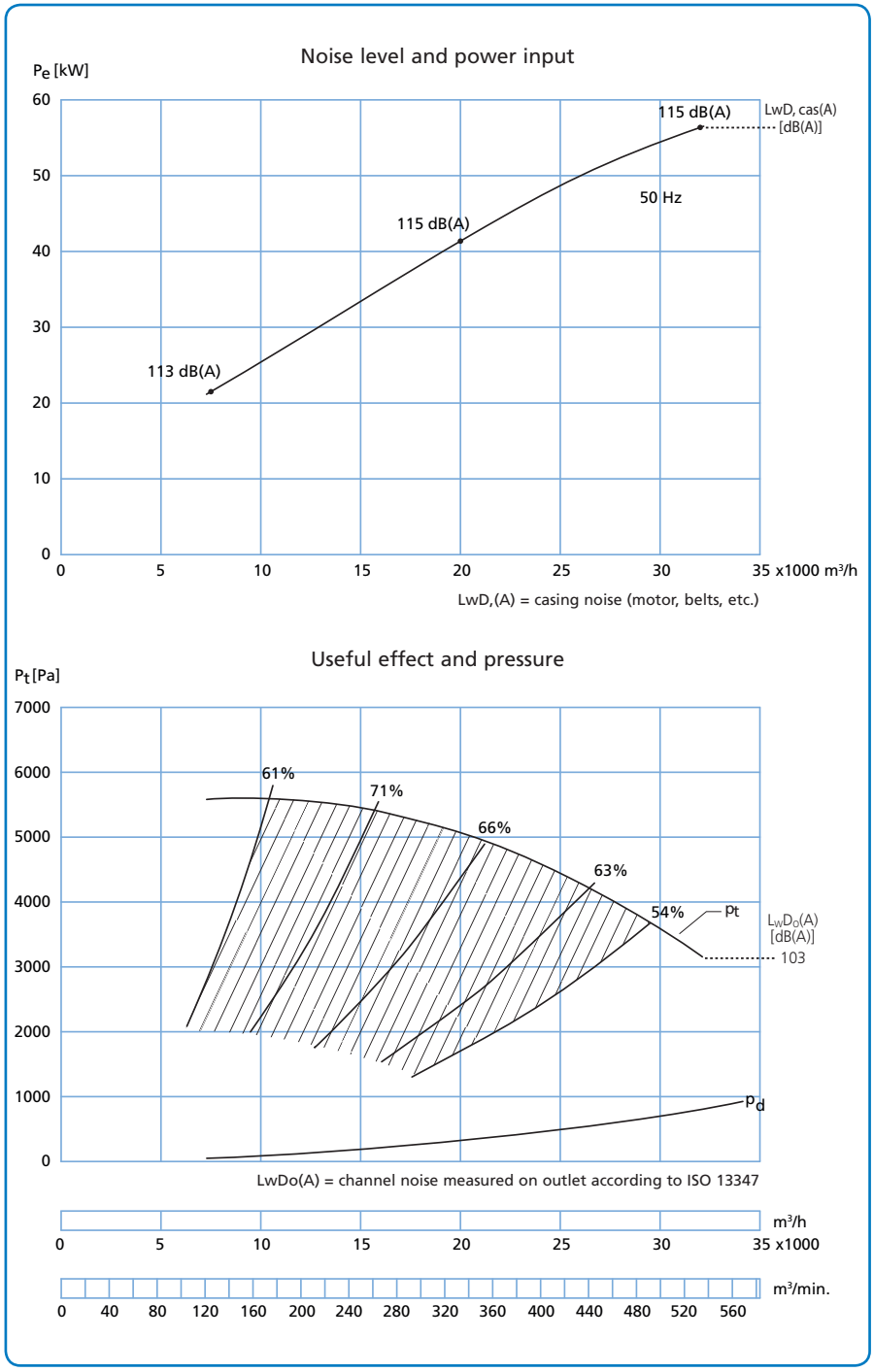

18.04.2017

Fan type JK-70MTDP
Technical data

Motor: IP 55

Supplied with the following motors:

kW	amp.	Weight of motor kg	50 Hz
55,0	96,0	421	1480 min^{-1}

Max. min^{-1}:

Standard impeller: 1,500 min^{-1}.

Operating range:

Air volume: 17,500 - 40,000 m³/h

Pressure: 260 - 550 mmWG

Power supply:

3 × 400 V.

Construction:

B3/B5 - motor mounted on foot and flange.

Impeller:

No. of blades, standard: 8 pcs.

Diameter: ø1087 mm

Height: 354 mm

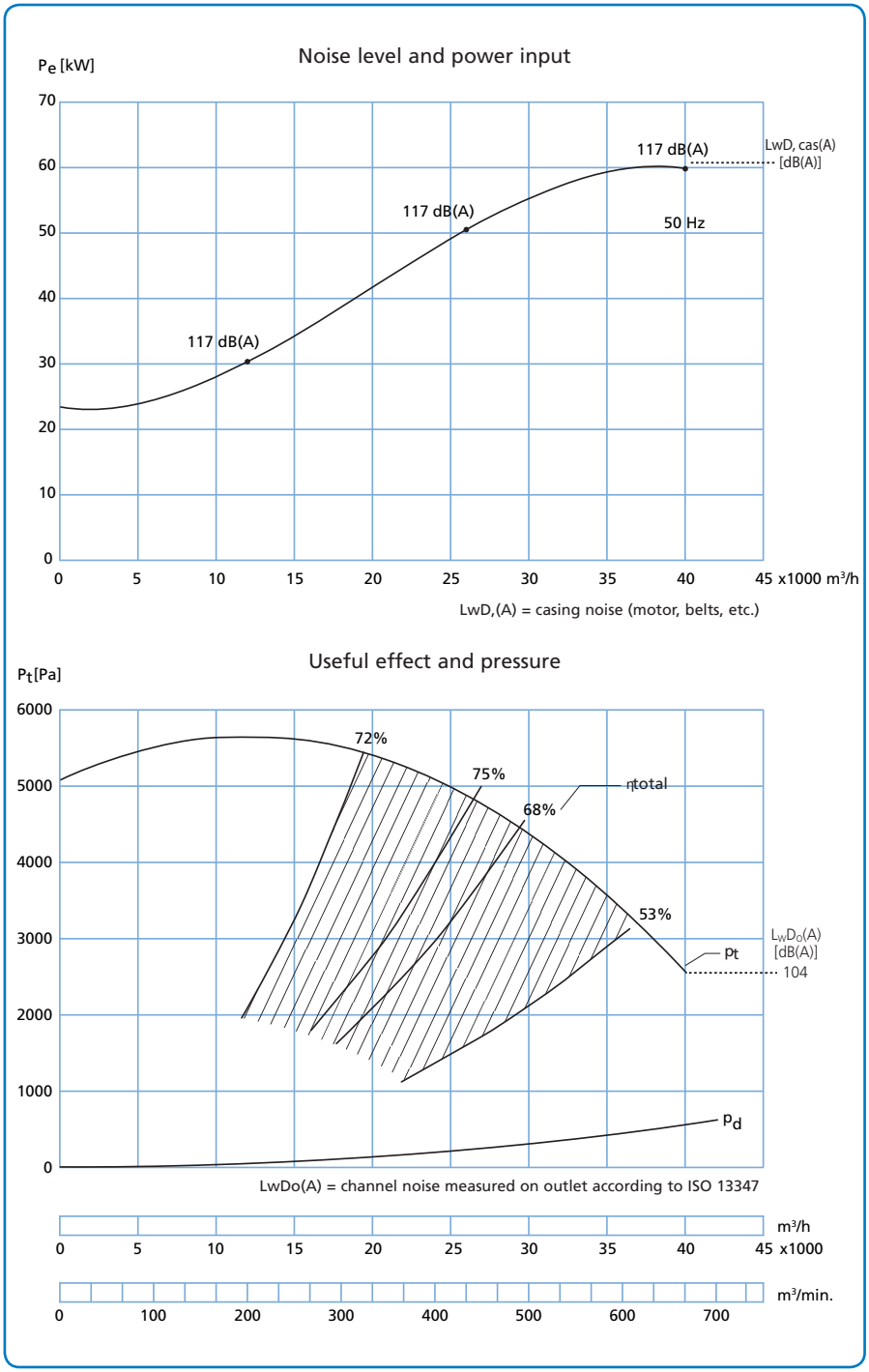

18.04.2017

Fan type JK-80MTDP
Technical data

Motor: IP 55

Supplied with the following motors:

kW	amp.	Weight of motor kg	50 Hz
75,0	130,0	538	1490 min^{-1}

Max. min^{-1}:

Standard impeller: 1,500 min^{-1}.

Operating range:

Air volume: 17,500 - 62,500 m³/h

Pressure: 240 - 520 mmWG

Power supply:

3 × 400 V.

Construction:

B3/B5 - motor mounted on foot and flange.

Impeller:

No. of blades, standard: 8 pcs.

Diameter: ø1131 mm

Height: 396 mm

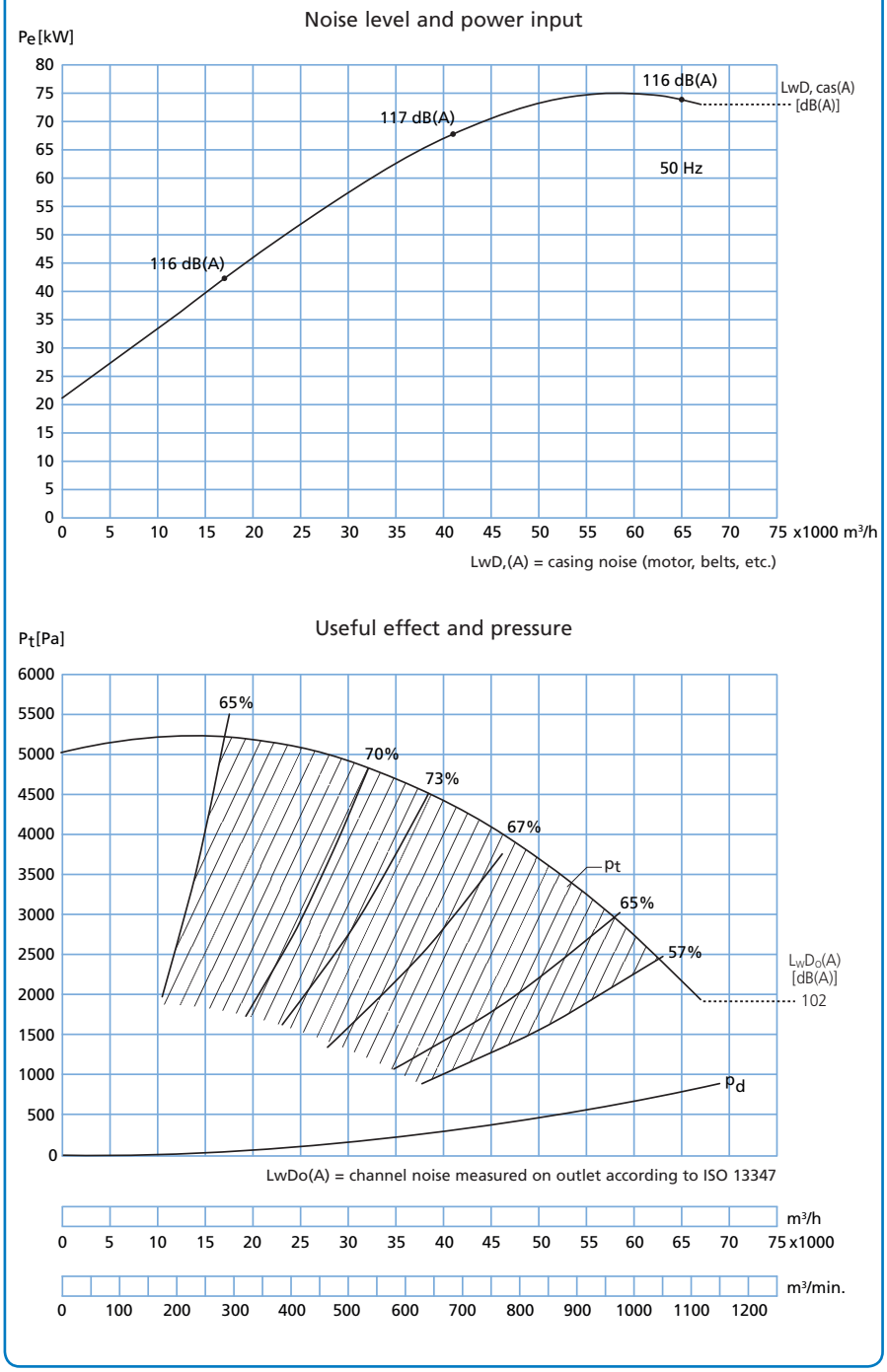

18.04.2017

Fan type JK-90MTDP
Technical data

Motor: IP 55

Supplied with the following motors:

kW	amp.	Weight of motor kg	50 Hz
90,0	153,0	638	1480 min^{-1}

Max. min-1:

Standard impeller: 1.500 min^{-1}.

Operating range:

Air volume: 22,000 - 77,000 m³/h

Pressure: 250 - 480 mmWG

Power supply:

3 × 400 V.

Construction:

B3/B5 – motor mounted on foot and flange.

Impeller:

No. of blades, standard: 8 pcs.

Diameter: ø1097 mm

Height: 470 mm

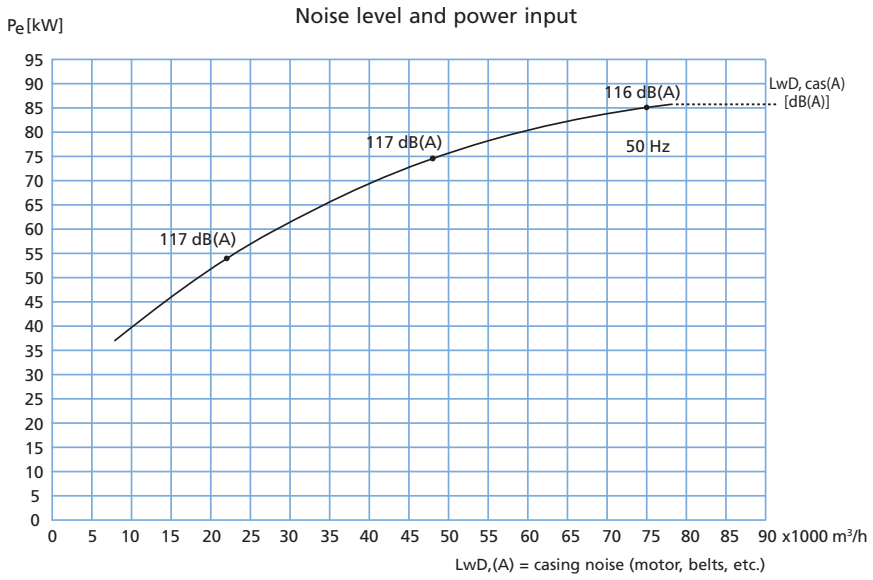

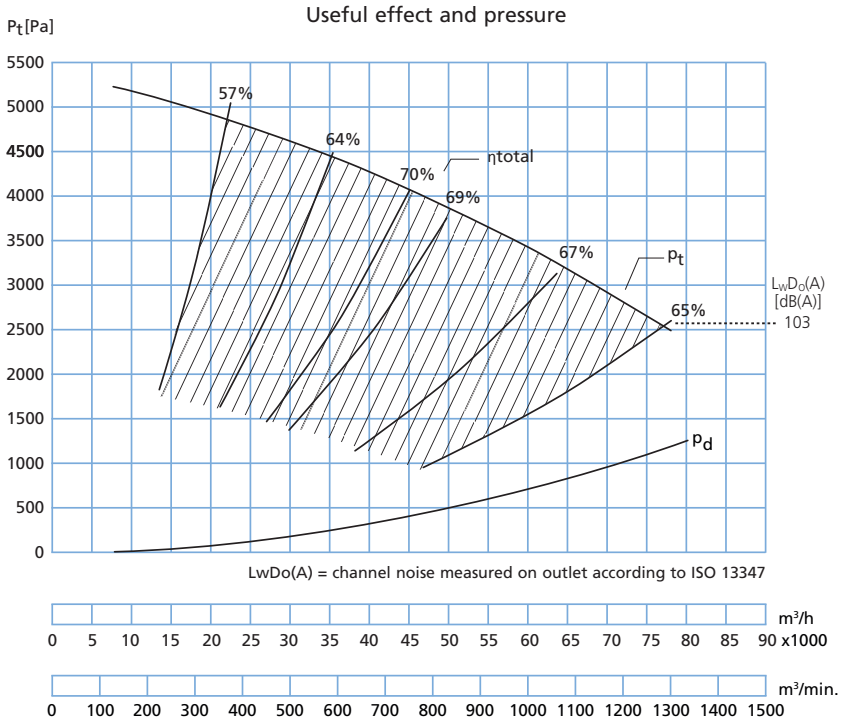

01.06.2010

Fan types
JK-30MTD – JK-40MTD – JK-50MTD

The direct drive centrifugal fan types JK-30MTD, JK-40MTD and JK-50MTD are designed for transport of clean air.

Equipped with backward-inclined blades and aerodynamic intake.

The impellers are statically and dynamically balanced according to ISO 10816-3.

Normally, a frequency transformer is used to control the min^{-1} and the air volume of the fan.

Max. operating temperature: 60°C

The inlet (D) is supplied with flange as standard.

Specific dimensions for the outlet and inlet flanges can be found under "Flanges".

Available in anti-spark version with stainless steel inlet and explosion proof (Eex) motor.

The technical data for each type appears on the following pages.

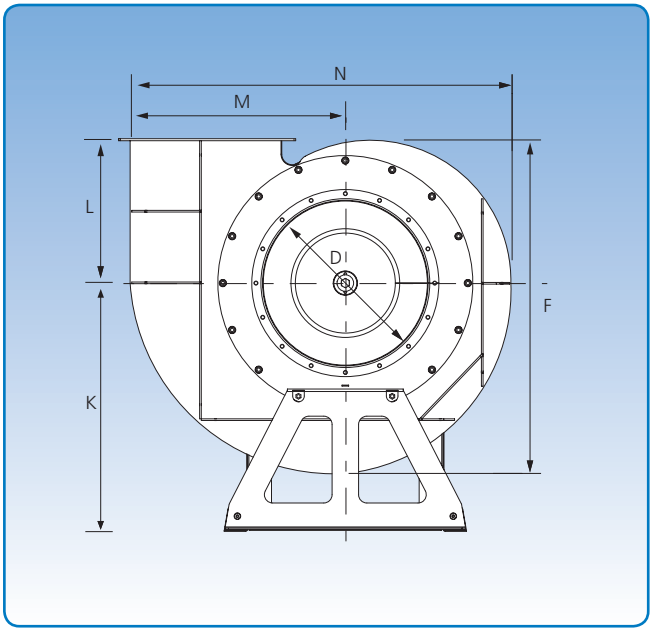

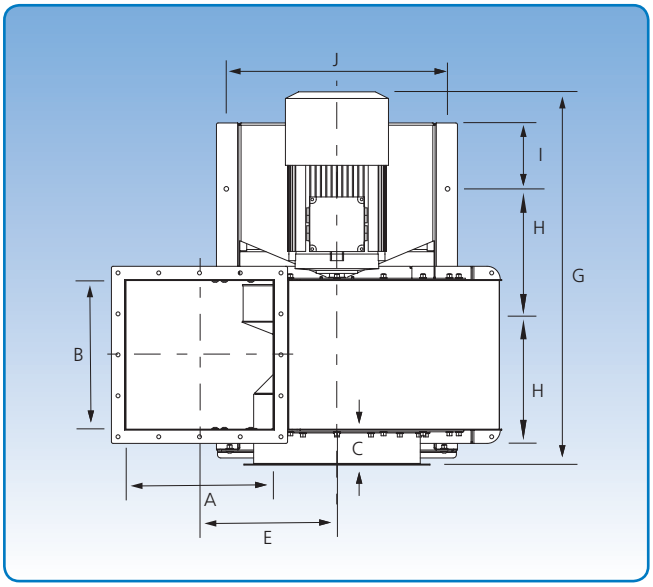

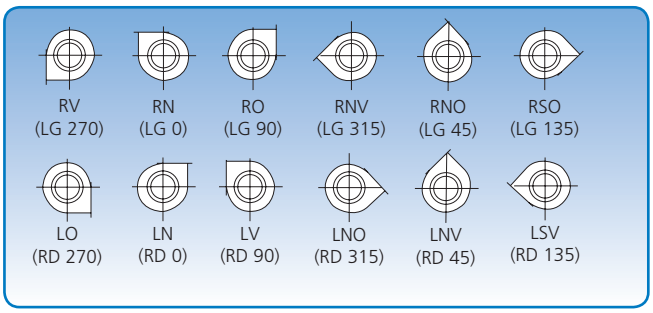

6 positions. The position illustrations are viewed from the inlet side.

Dimensions

Type	A mm	B mm	C mm	D mm	E mm	F mm	G mm	H mm	I mm	J mm	K mm	L mm	M mm	N mm	Weight without motor kg
JK-30MTD	250	250	106	300	318	645	733	275	51	430	550	276	450	768	37
JK-40MTD	350	350	106	400	368	779	903	370	49	550	650	326	550	1098	119
JK-50MTD	450	450	106	500	416	1012	1128	370	199	672	750	436	643	1146	206

01.06.2010

Fan type JK-30MTD
Technical data

Motor: IP 55

Supplied with the following motors:

50 Hz	60 Hz	amp.	Weight of motor kg
4,0 kW	4,8 kW	7,8	45
2880 min^{-1}	3456 min^{-1}		

Max. min^{-1}:

Impeller: 3,575 min^{-1}

Operating range:

Air volume: 2,000 – 6,000 m³/h

Pressure: 120 – 330 mm WG

Power supply:

230/400 V

Construction:

B3 – motor mounted on foot.

Variants:

Fan can be powered by flange motor – Type B5/B14

Impeller:

No. of blades, standard: 6 pcs.

Diameter: ø424 mm

Height: 171 mm

Noise level and power input

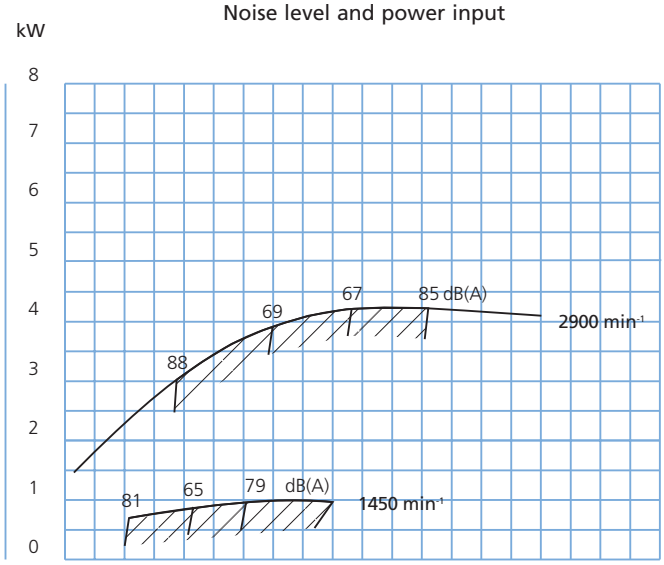

Useful effect and pressure

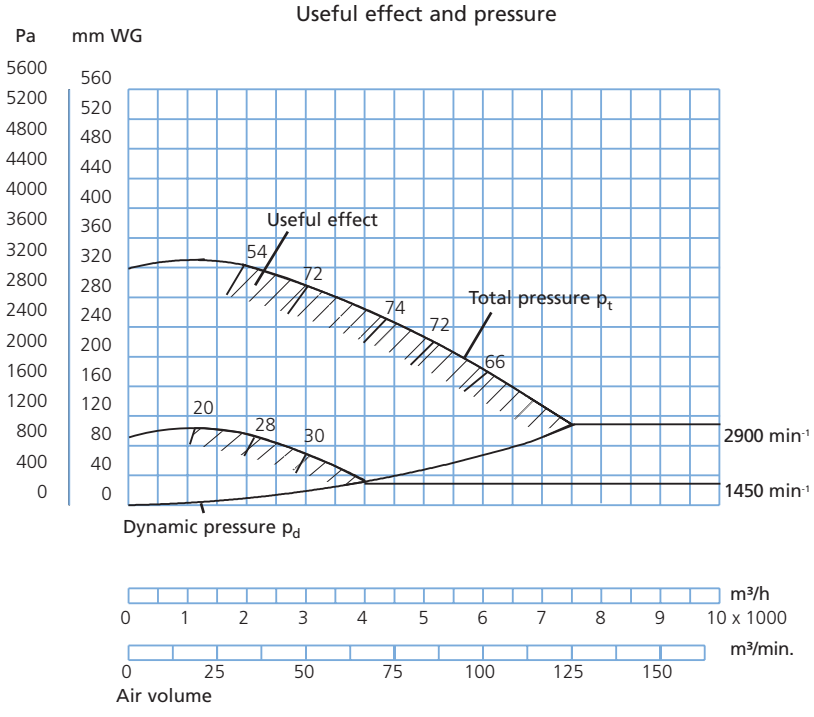

01.06.2010

Fan type JK-40MTD
Technical data

Motor: IP 55

Supplied with the following motors:

50 Hz	60 Hz	amp.	Weight of motor kg
11 kW	13,2 kW	20,2	102
2940 min^{-1}	3528 min^{-1}		

Max. min^{-1}:

Impeller: 3,575 min^{-1}

Operating range:

Air volume: 2,500 – 14,000 m³/h

Pressure: 120 – 460 mm WG

Power supply:

400/690 V

Construction:

B3 – motor mounted on foot.

Impeller:

No. of blades, standard: 6 pcs.

Diameter: ø515 mm

Height: 196 mm

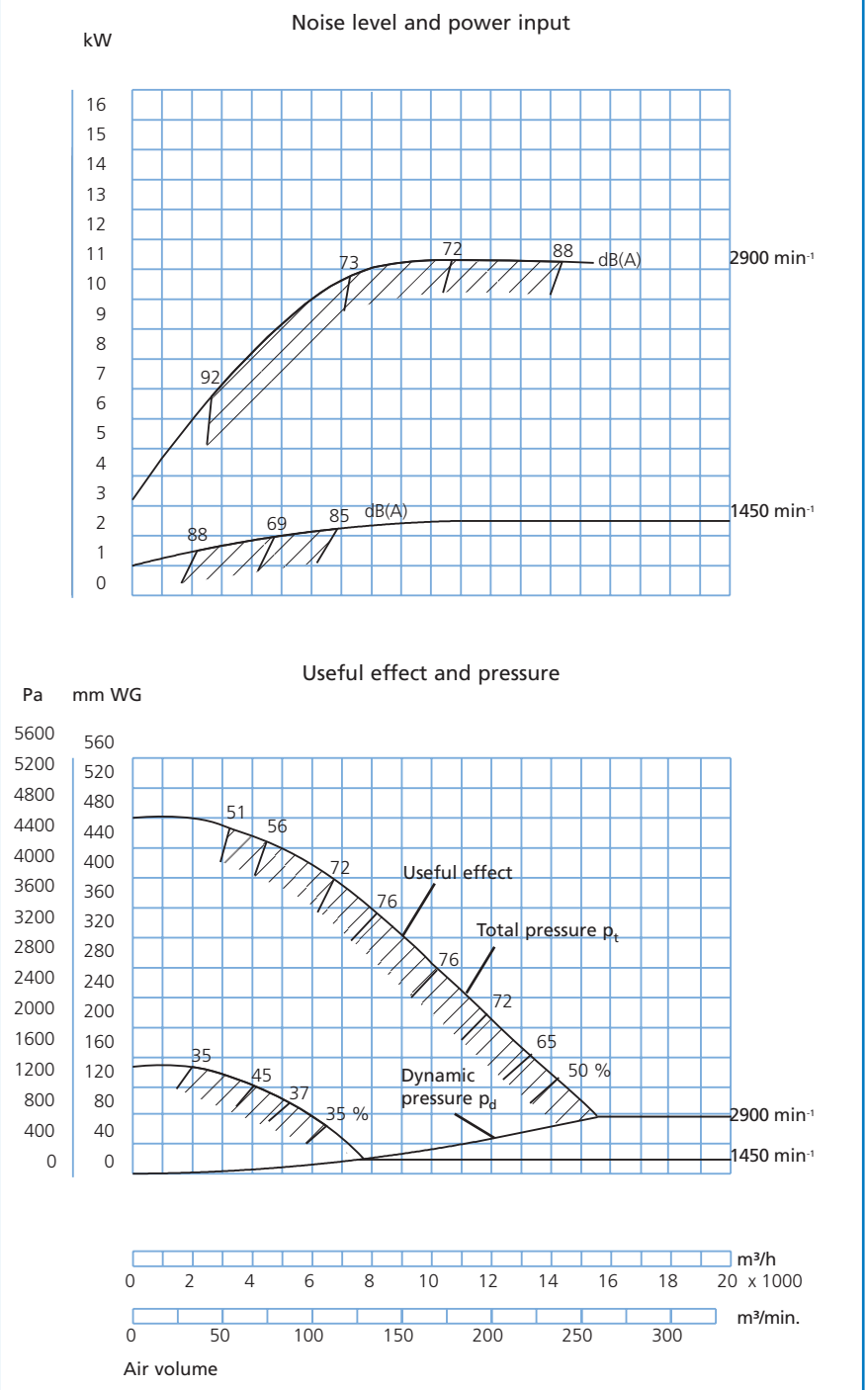

22.08.2011

Fan type JK-50MTD
Technical data

Motor: IP 55

Supplied with the following motors:

50 Hz	60 Hz	amp.	Weight of motor kg
18,5 kW	22,2 kW	33,0	136
22,0 kW	26,4 kW	39,2	158
2940 min^{-1}	3528 min^{-1}		

Max. min^{-1}:

Impeller: 3,575 min^{-1}

Operating range:

Air volume: 2,500 – 22,000 m³/h

Pressure: 160 – 590 mm WG

Power supply:

400/690 V

Construction:

B3 – motor mounted on foot.

Impeller:

No. of blades, standard: 8 pcs.

Diameter: ø574/608 mm

Height: 227/224 mm

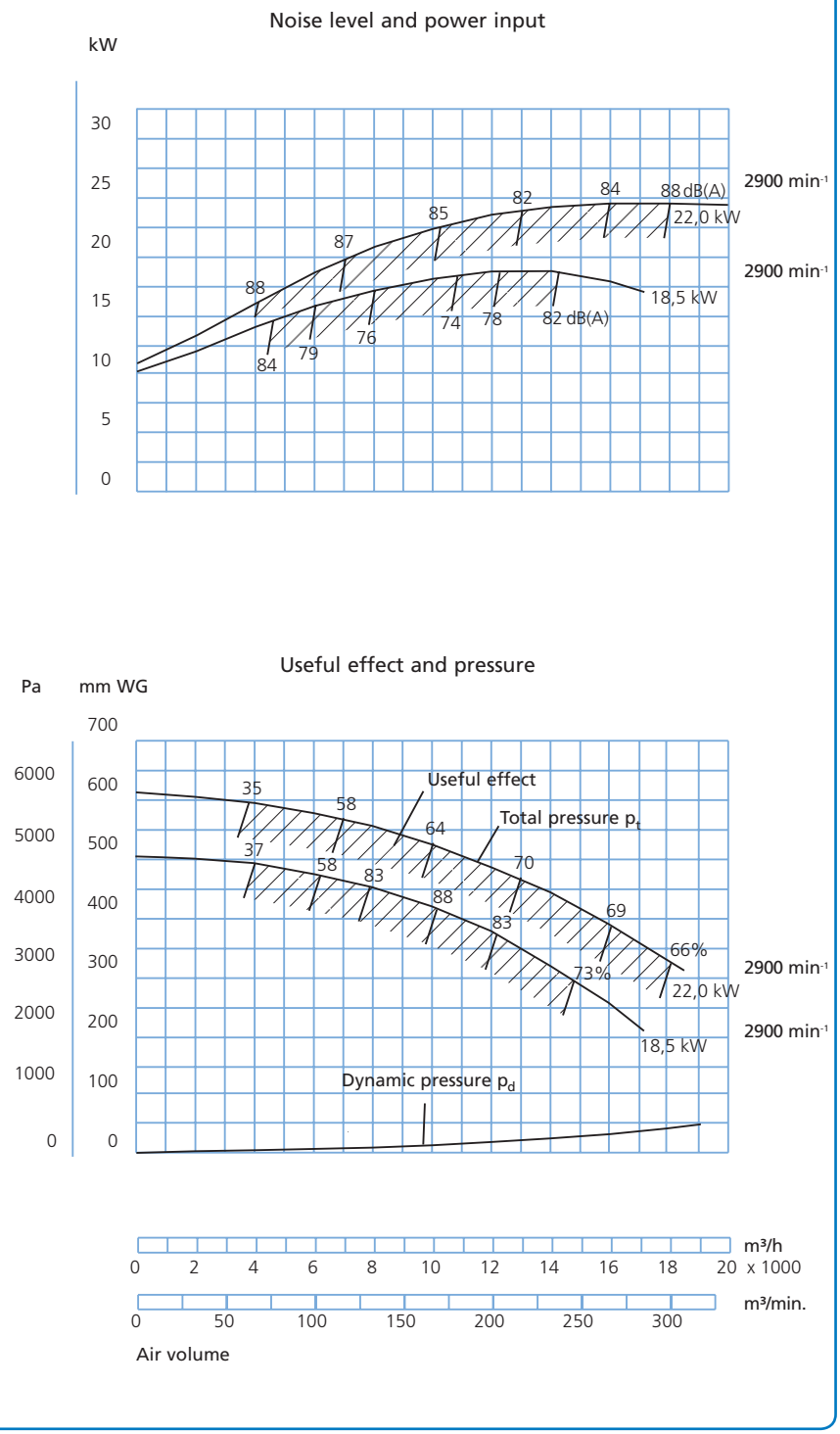

Fan types JK-55MTD – JK-90MTD

The direct drive centrifugal fan types JK-55MTD – JK-90MTD are designed for transport of clean air:

Equipped with backward-inclined blades and aerodynamic intake.

The impellers are statically and dynamically balanced.

Max. operating temperature: 60°C

The inlet (D) is supplied with flange as standard.

Specific dimensions for the outlet and inlet flanges can be found under "Flanges".

Available in anti-spark version with stainless steel inlet and explosion proof (Eex) motor.

The technical data for each type appears on the following pages.

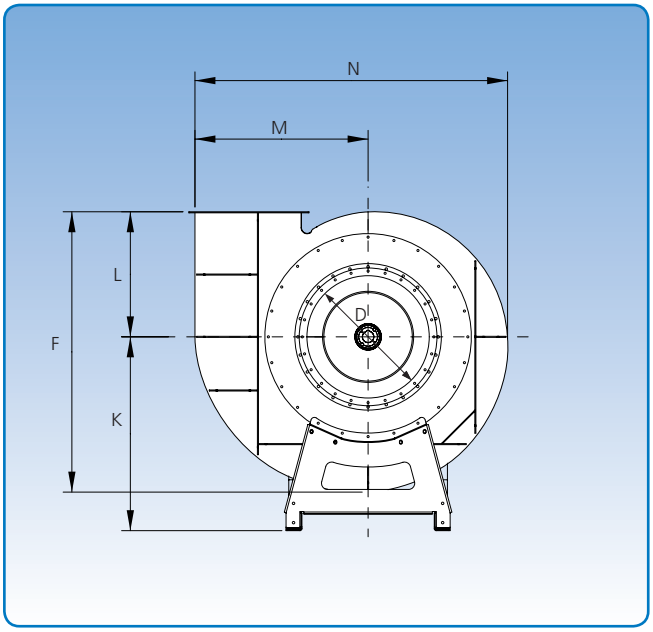

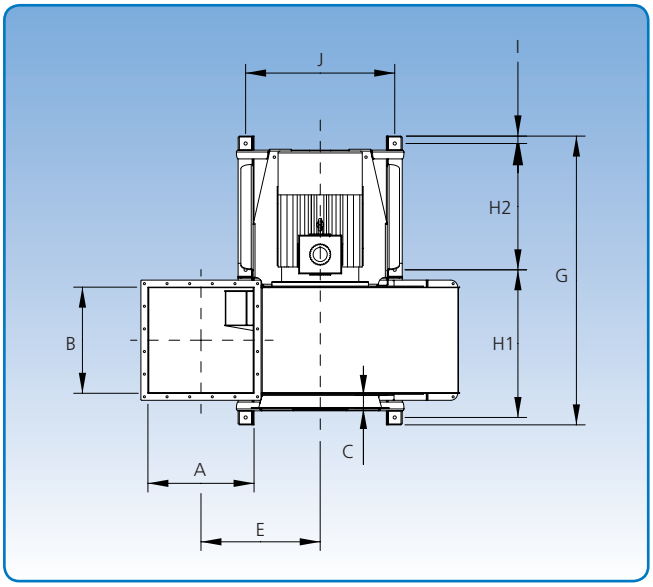

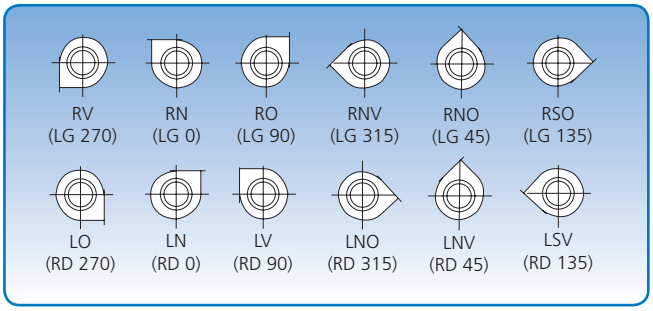

6 positions. The position illustrations are viewed from the inlet side.

Dimensions

Type	A mm	B mm	C mm	D mm	E mm	F mm	G mm	H1 mm	H2 mm	I mm	J mm	K mm	L mm	M mm	N mm	Weight without motor kg
JK-55MTD	505	505	173	550	655	1515	1481	742	655	42	850	1032	685	906	1659	441
JK-60MTD	505	505	75	600	655	1515	1481	742	655	42	850	1032	685	906	1659	444
JK-70MTD	605	605	75	700	680	1598	1646	842	720	42	850	1105	713	979	1773	491
JK-80MTD	705	705	75	800	711	1691	1821	942	795	42	1000	1188	744	1062	1901	564
JK-90MTD	805	805	75	900	718	1762	1990	1071	832	44	1264	1264	771	1120	1994	807

12.04.2016

Fan type JK – 55 MTD
Technical data

Motor: IP 55

Supplied with the following motors:

50 Hz	amp.	Weight of motor kg
22 kW (30 hk) 1470 min^{-1}	45,0	215

50 Hz	amp.	Weight of motor kg
30 kW (40 hk) 1470 min^{-1}	58,0	243

Max. min-1:

Standard impeller: 1.800 min^{-1}.

Operating range:

Pressure: 280 - 450 mmWG

Power supply:

3 × 400 V.

Construction:

B3/B5 – motor mounted on foot and flange.

Impeller:

No. of blades, standard: 8 pcs.

Diameter: ø965 mm

Height: 315 mm

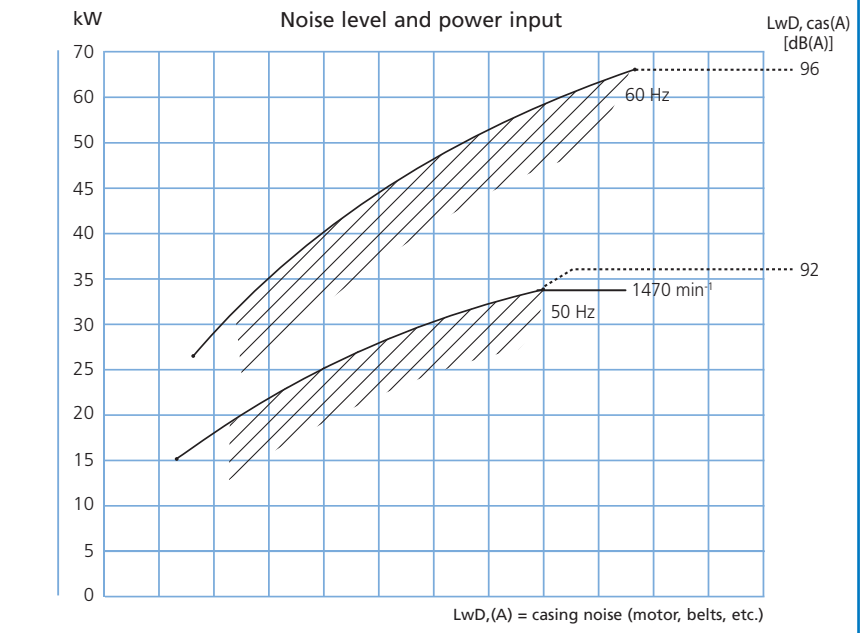

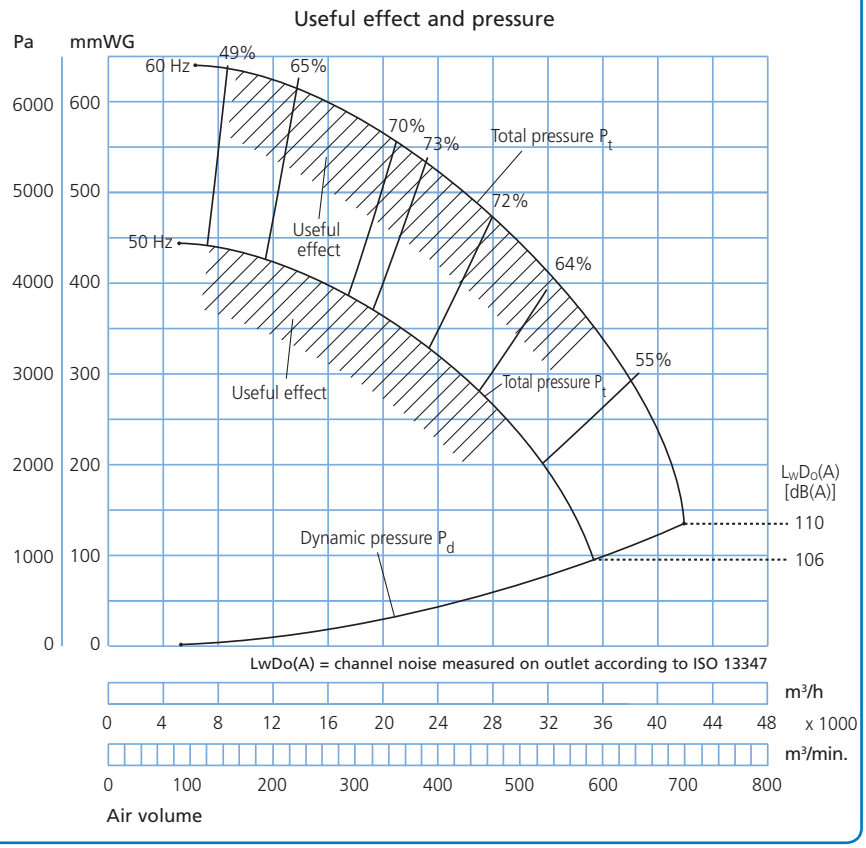

01.06.2010

Fan type JK-60MTD
Technical data

Motor: IP 55

Supplied with the following motors:

50 Hz	60 Hz	amp.	Weight of motor kg
45 kW (60 hp)	54 kW (72 hp)	78,4	328
1475 min^{-1}	1770 min^{-1}		

Max. min^{-1}:

Standard impeller: 1,800 min^{-1}.

Operating range:

Air volume: 4,000 - 43,000 m³/h

Pressure: 180 - 500 mmWG

Power supply:

3 × 400 V.

Construction:

B3/B5 - motor mounted on foot and flange.

Impeller:

No. of blades, standard: 8 pcs.

Diameter: ø1048 mm

Height: 292 mm

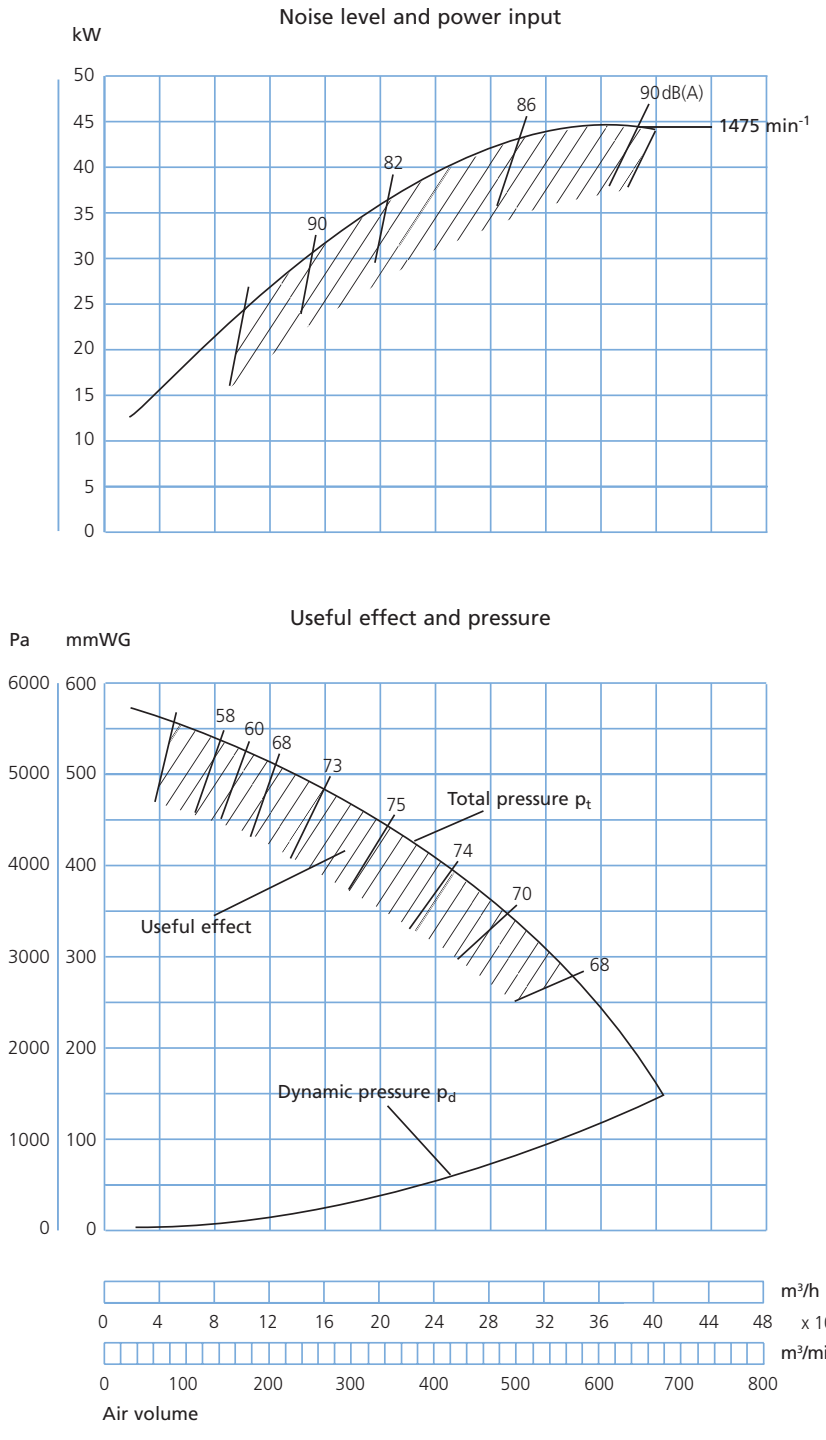

31.01.2014

Fan type JK-70MTD
Technical data

Motor: IP 55

Supplied with the following motors:

50 Hz	60 Hz	amp.	Weight of motor kg
55 kW (75 PS)	66 kW (89 hp)	95,4	452
1480 min^{-1}	1776 min^{-1}		

Max. min^{-1}:

Standard impeller: 1,780 min^{-1}.

Operating range:

Air volume: 6,000 - 59,000 m³/h

Pressure: 170 - 520 mmWG

Power supply:

3 × 400 V.

Construction:

B3/B5 - motor mounted on foot and flange.

Impeller:

No. of blades, standard: 8 pcs.

Diameter: ø1087 mm

Height: 332 mm

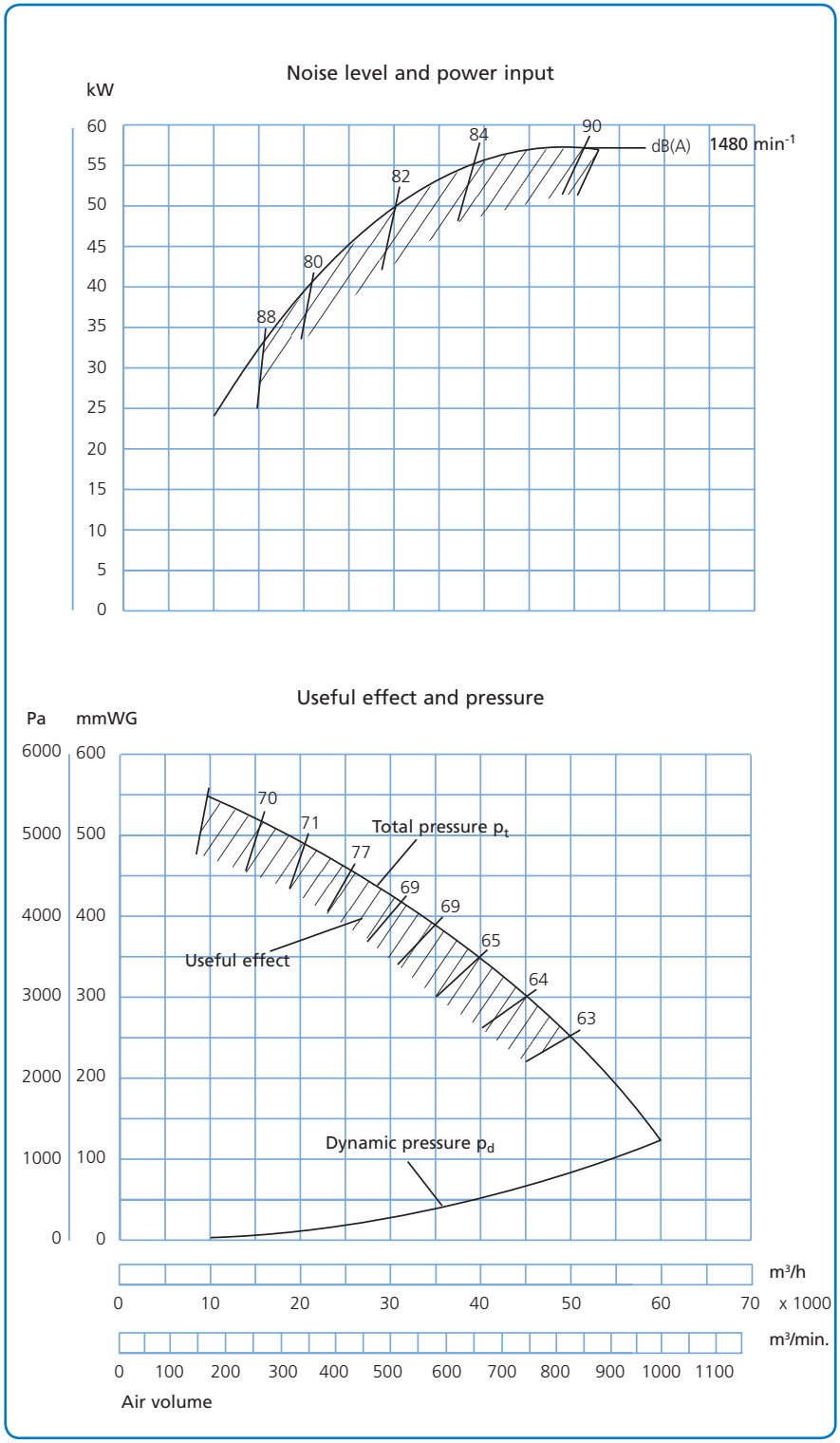

01.06.2010

Fan type JK-80MTD
Technical data

Motor: IP 55

Supplied with the following motors:

50 Hz	60 Hz	amp.	Weight of motor kg
75 kW (101 hp)	90 kW (121 hp)	129,0	592
1475 min^{-1}	1770 min^{-1}		

Max. min^{-1}:

Standard impeller: 1,770 min^{-1}.

Operating range:

Air volume: 8,000 - 76,000 m³/h

Pressure: 190 - 550 mmWG

Power supply:

3 × 400 V.

Construction:

B3/B5 - motor mounted on foot and flange.

Impeller:

No. of blades, standard: 8 pcs.

Diameter: ø1131 mm

Height: 380 mm

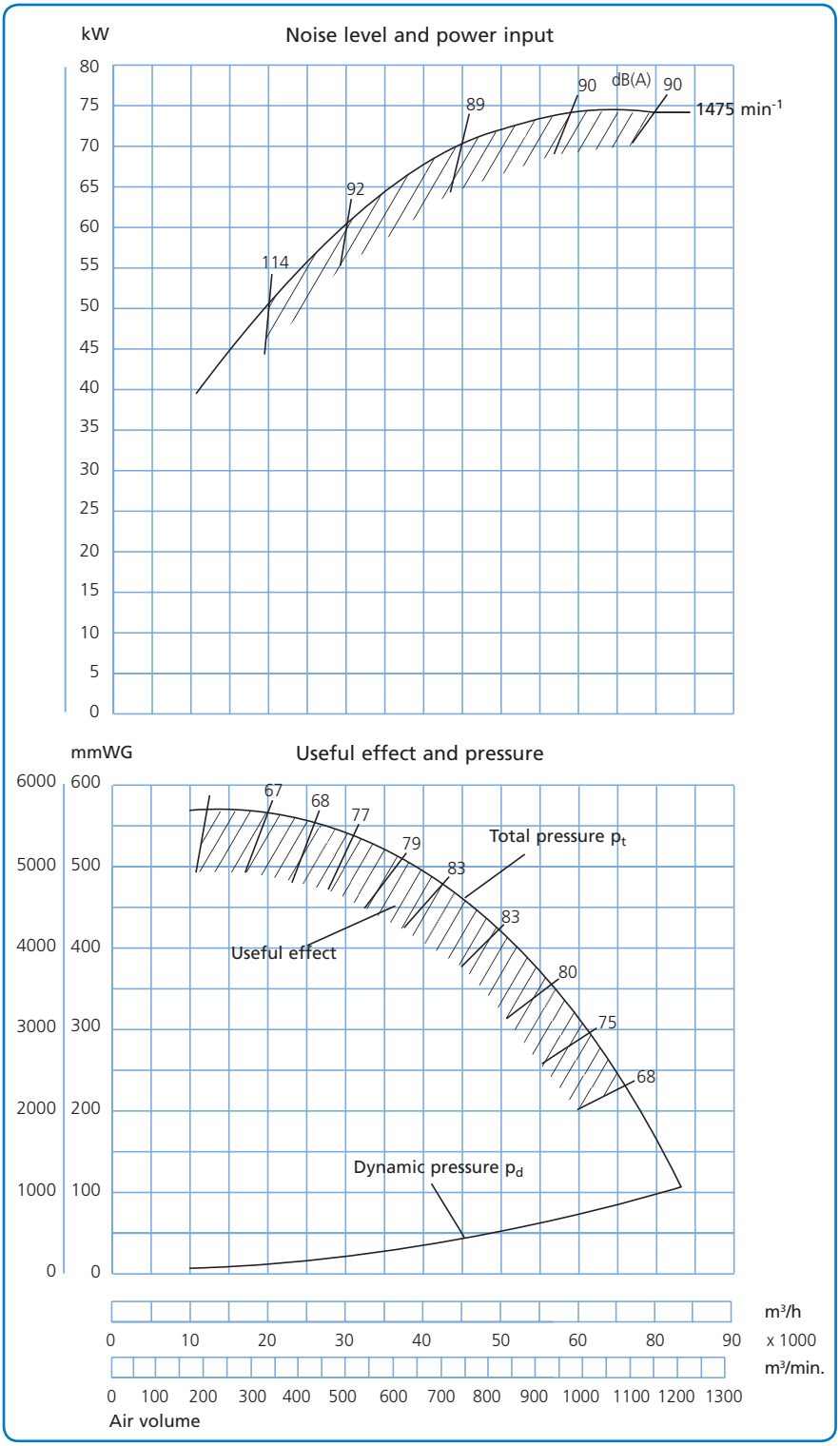

19.09.2013

Fan type JK-90MTD
Technical data

Motor: IP 55

Supplied with the following motors:

50 Hz	60 Hz	amp.	Weight of motor kg
90 kW (101 hp)	110 kW (150 hp)	155,0	672
1475 min^{-1}	1770 min^{-1}		

Max. min^{-1}:

Standard impeller: 1,770 min^{-1}.

Operating range:

Air volume: 10,000 - 85,000 m³/h

Pressure: 250 - 600 mmWG

Power supply:

3 × 400 V.

Construction:

B3/B5 - motor mounted on foot and flange.

Impeller:

No. of blades, standard: 8 pcs.

Diameter: ø1171 mm

Height: 454 mm

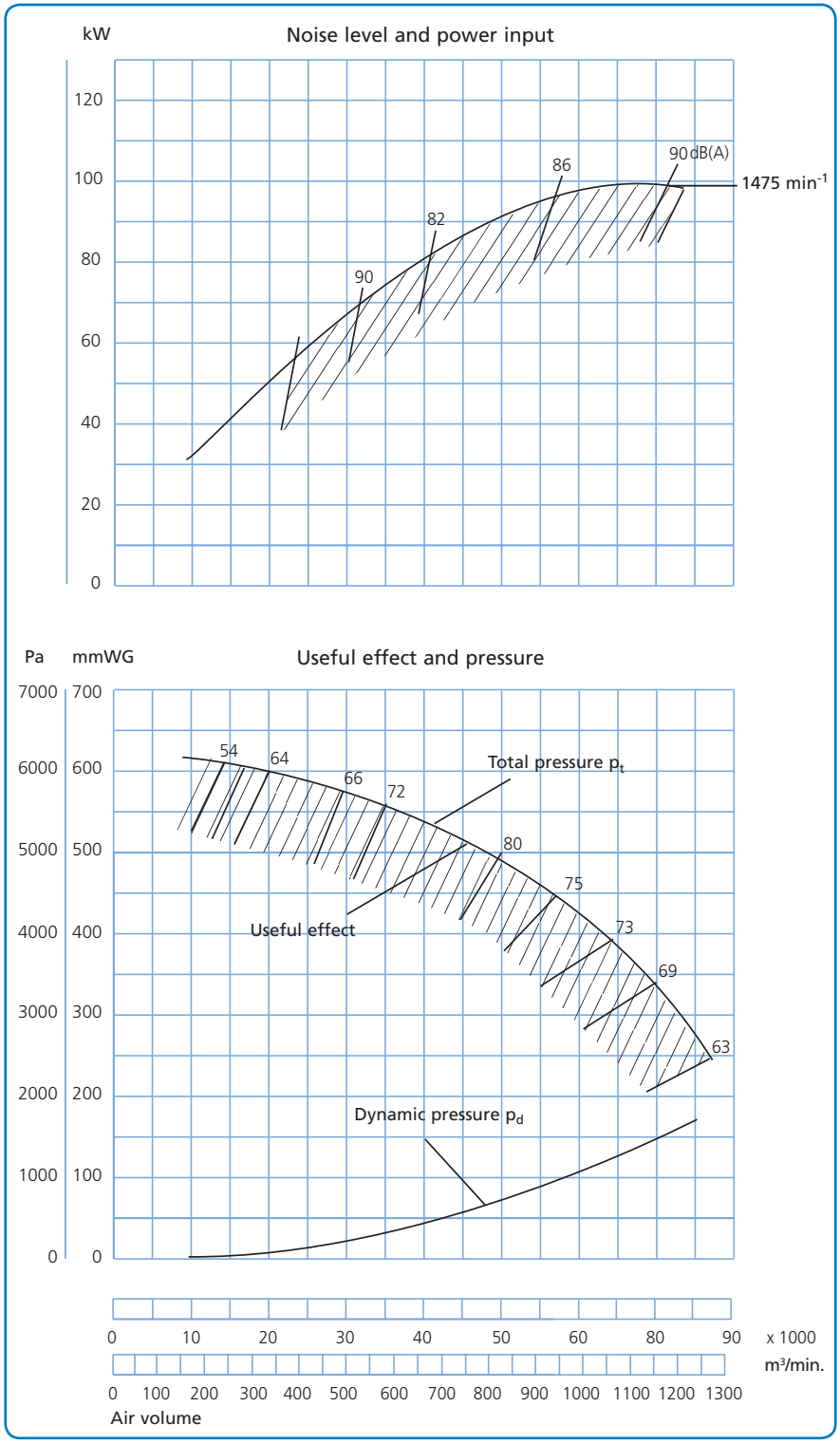

01.06.2010

Fan types JK-30MT - JK-100MT

The indirect drive centrifugal fan types JK-30MT - JK-100MT are designed for transport of clean air.

Equipped with self-cleaning impellers with backward-inclined blades and aerodynamic intake. The impellers are statically and dynamically balanced.

The pulleys are shaft-mounted with taperlock bushing, allowing easy replacement for changed fan speed.

Max. operating temperature: 60°C
With cooling wings: Up to 200°C

Available in anti-spark version with stainless steel inlet and explosion-proof (Eex) motor.

Dimensions (D) for the inlet are external. Supplied with flange as standard.

Belt drive is anti-static.

Specific dimensions for outlet and inlet flanges can be found under "Flanges".

The technical data for each type appears on the following pages.

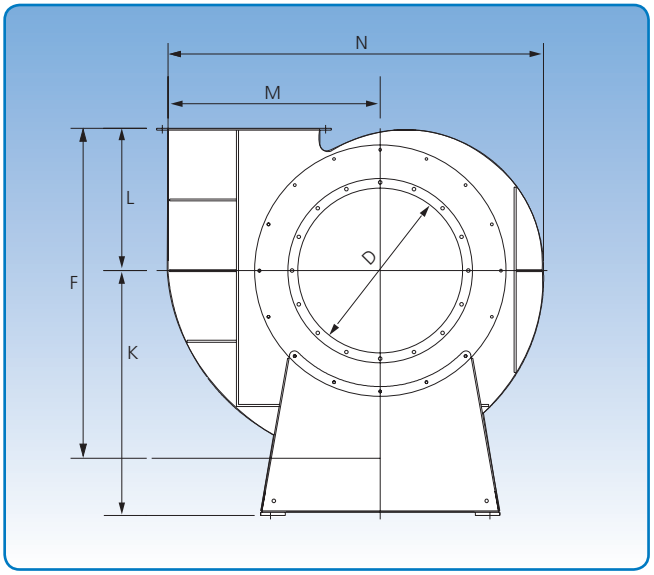

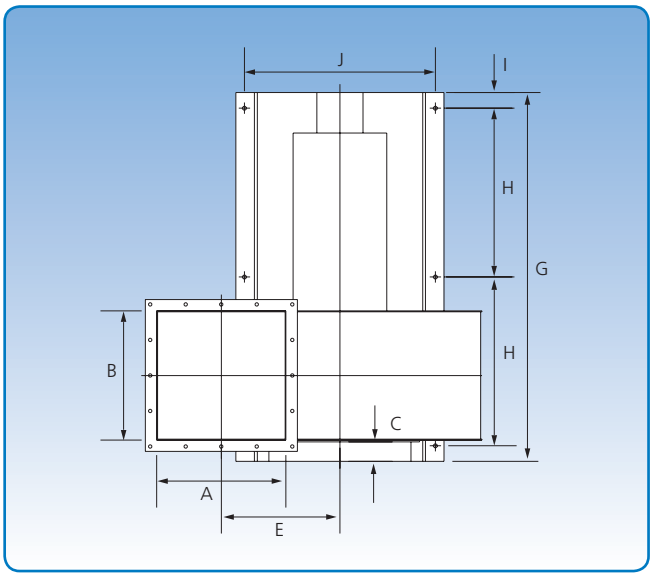

Steel plate dimensions in mm

Type	JK-30MT - JK-60MT	JK-70MT - JK-90MT	JK-100MT
Impeller - standard	3	4	5
Fan housing - standard	3	3	3

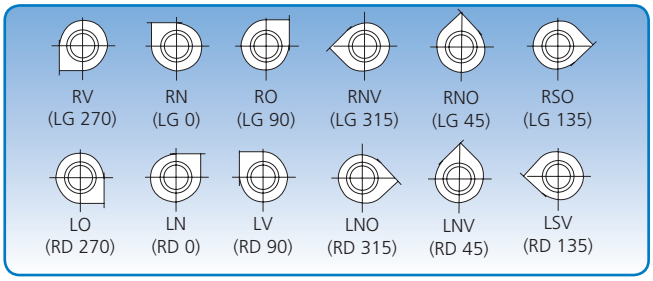

6 positions. The position illustrations are viewed from the inlet side.

Type	Dimensions														Weight without motor
	A mm	B mm	C mm	D mm	E mm	F mm	G mm	H mm	I mm	J mm	K mm	L mm	M mm	N mm	kg
JK-30MT	250	250	75	300	318	650	880	370	55	430	550	275	450	775	142
JK-40MT	350	350	75	400	368	775	1128	494	55	550	650	325	550	925	226
JK-50MT	455	455	75	500	418	1000	1328	587	55	672	750	436	650	1150	343
JK-60MT	505	505	75	600	543	1186	1563	700	59	825	955	486	800	1400	554
JK-70MT	605	605	75	700	593	1360	1895	855	70	850	1125	566	900	1570	703
JK-80MT	705	705	75	800	643	1490	1995	905	70	850	1125	625	1000	1727	788
JK-90MT	805	805	75	900	723	1670	2310	1030	100	1070	1325	700	1130	1940	1189
JK-100MT	905	905	75	1000	793	1865	2410	1080	100	1070	1425	770	1250	2175	1295

01.06.2010

Fan type JK-30MT
Technical data

Motor: IP 55

Supplied with the following motors:

kW	hp	amp.	Weight of motor kg
3,0	4,0	6,1	28
4,0	5,5	7,7	39
5,5	7,5	11,1	43
7,5	10,0	14,7	49

Max. min^{-1}:

Standard impeller: 3,575 min^{-1}

Operating range:

Air volume: 2,500 - 8,000 m³/h

Pressure: 80 - 370 mmWG

Power supply:

400 V - 50 Hz.

Construction:

B3 – motor mounted on foot.

Impeller:

No. of blades, standard: 6 pcs.

Diameter: ø424 mm

Height: 171 mm

Noise level and power input

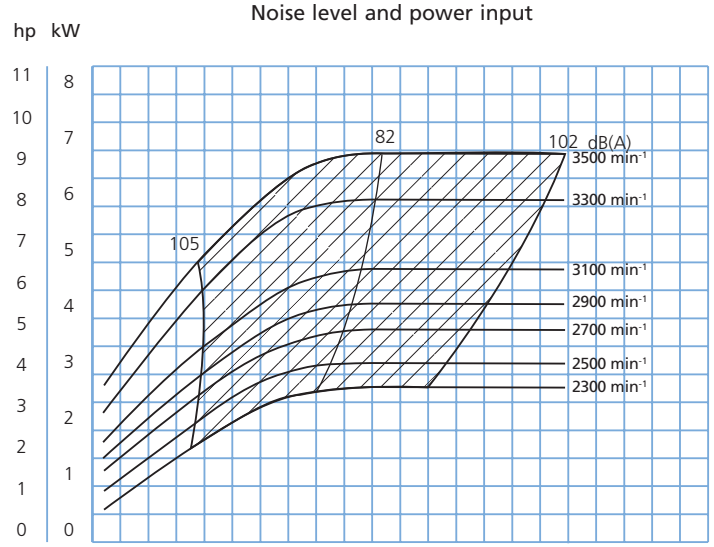

Useful effect and pressure

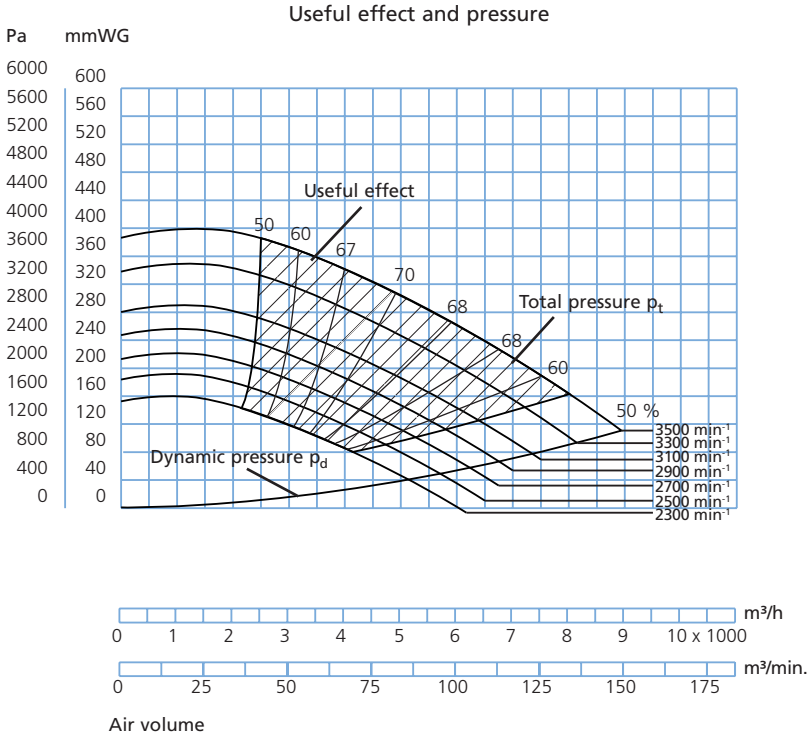

01.06.2010

Fan type JK-40MT
Technical data

Motor: IP 55

Supplied with the following motors:

kW	hp	amp.	Weight of motor kg
7,5	10,0	14,7	49
11,0	15,0	21,2	69
15,0	20,0	28,2	83
18,5	25,0	34,4	87

Max. min^{-1}:

Standard impeller: 3,435 min^{-1}

Operating range:

Air volume: 4,500 - 17,000 m³/h

Pressure: 100 - 450 mmWG

Power supply:

400 V - 50 Hz.

Construction:

B3 – motor mounted on foot.

Impeller:

No. of blades, standard: 6 pcs.

Diameter: ø515 mm

Højde: 196 mm

Noise level and power input

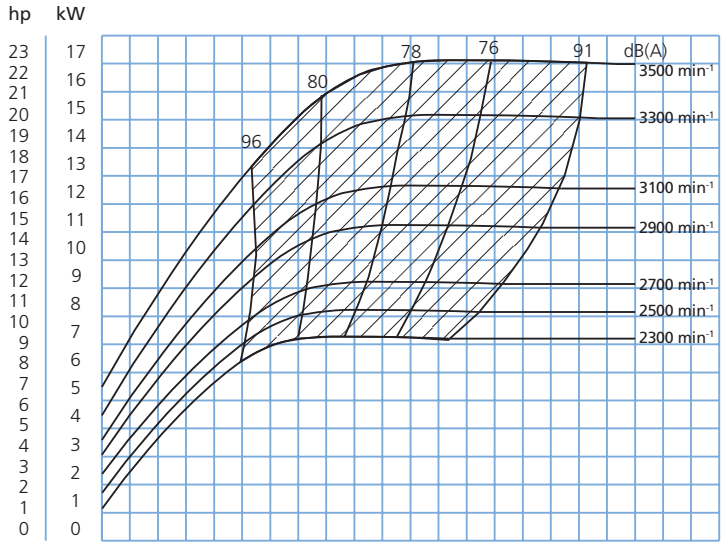

Useful effect and pressure

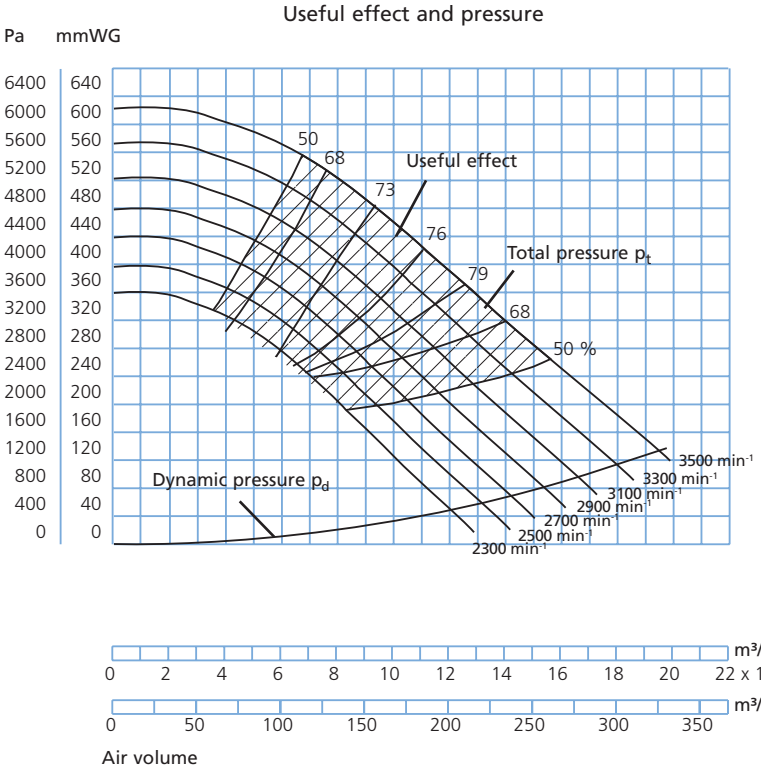

01.06.2010

Fan type JK-50MT
Technical data

Motor: IP 55

Supplied with the following motors:

kW	hp	amp.	Weight of motor kg
11,0	15,0	21,2	69
15,0	20,0	28,2	83
18,5	25,0	34,4	87
22,0	30,0	40,0	165
30,0	40,0	52,5	240

Max. min^{-1}:

Standard impeller: 2,450 min^{-1}

Operating range:

Air volume: 6,000 – 28,000 m³/h

Pressure: 120 – 520 mm WG

Power supply:

400 V - 50 Hz.

Construction:

B3 - motor mounted on foot.

Impeller:

No. of blades, standard: 8 pcs.

Diameter: ø705 mm

Height: 243 mm

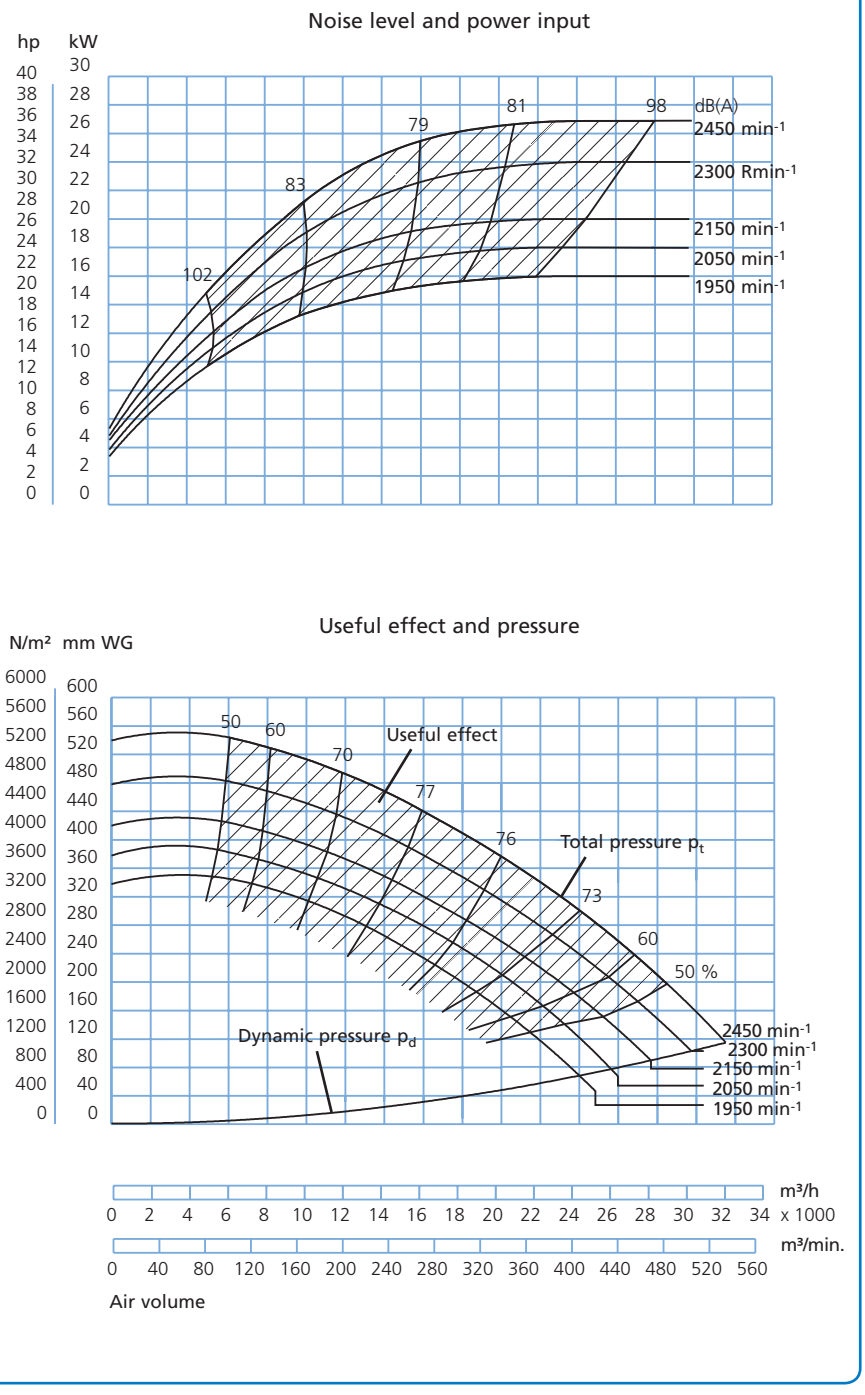

01.06.2010

Fan type JK-60MT
Technical data

Motor: IP 55

Supplied with the following motors:

kW	hp	amp.	Weight of motor kg
22,0	30,0	40,0	165
30,0	40,0	52,5	240
37,0	50,0	67,0	300
45,0	62,0	80,0	330

Max. min^{-1}:

Standard impeller: 2,350 min^{-1}

Operating range:

Air volume: 9,000 – 39,000 m³/h

Pressure: 160 – 600 mm WG

Power supply:

400 V - 50 Hz.

Construction:

B3 - motor mounted on foot.

Impeller:

No. of blades, standard: 8 pcs.

Diameter: ø805 mm

Height: 285 mm

Noise level and power input

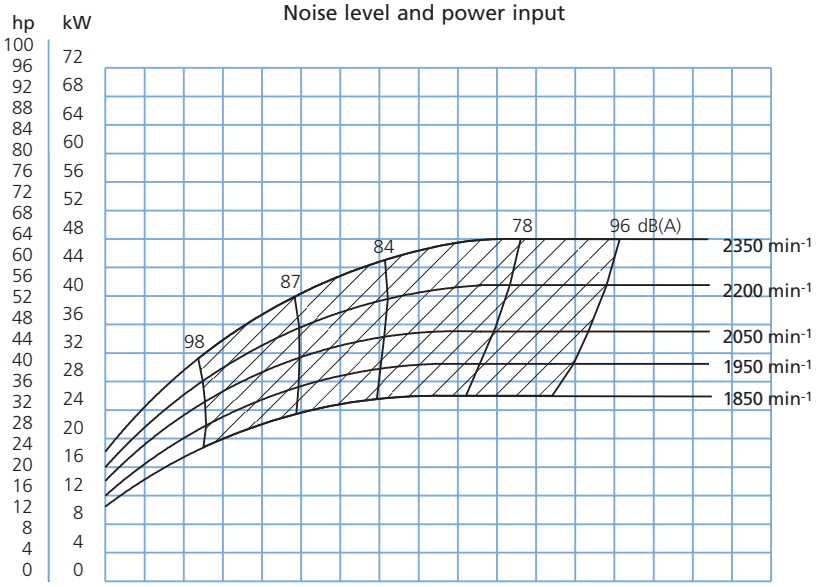

Useful effect and pressure

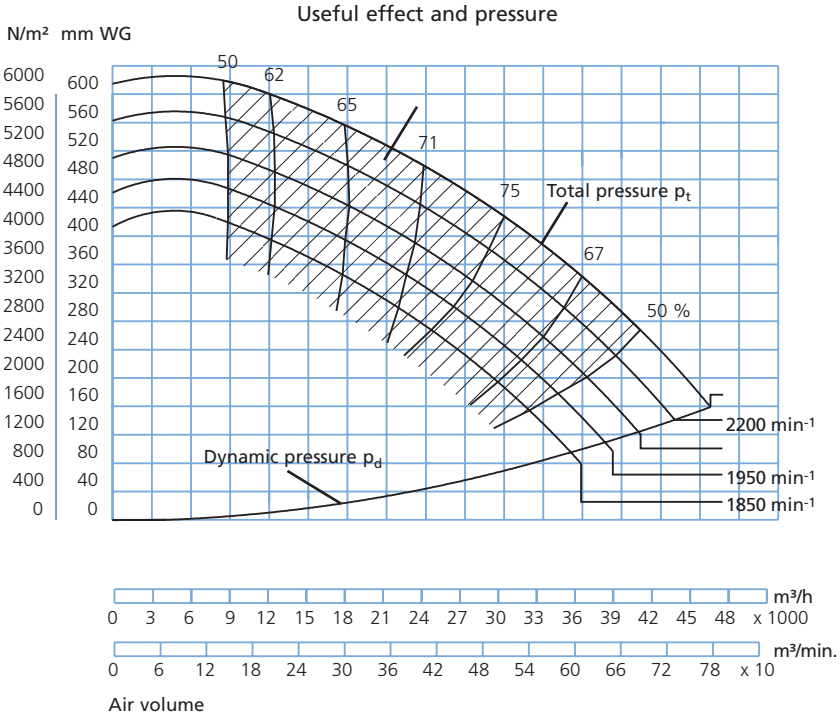

01.06.2010

Fan type JK-70MT
Technical data

Motor: IP 55

Supplied with the following motors:

kW	hp	amp.	Weight of motor kg
30,0	41,0	53,0	230
37,0	50,0	67,0	300
45,0	62,0	80,0	330
55,0	75,0	97,0	435
75,5	103,0	133,0	610

Max. min^{-1}:

Standard impeller: 2,050 min^{-1}

Operating range:

Air volume: 12,000 – 54,000 m³/h

Pressure: 150 – 600 mm WG

Power supply:

400 V - 50 Hz.

Construction:

B3 - motor mounted on foot.

Impeller:

No. of blades, standard: 8 pcs.

Diameter: ø905 mm

Height: 315 mm

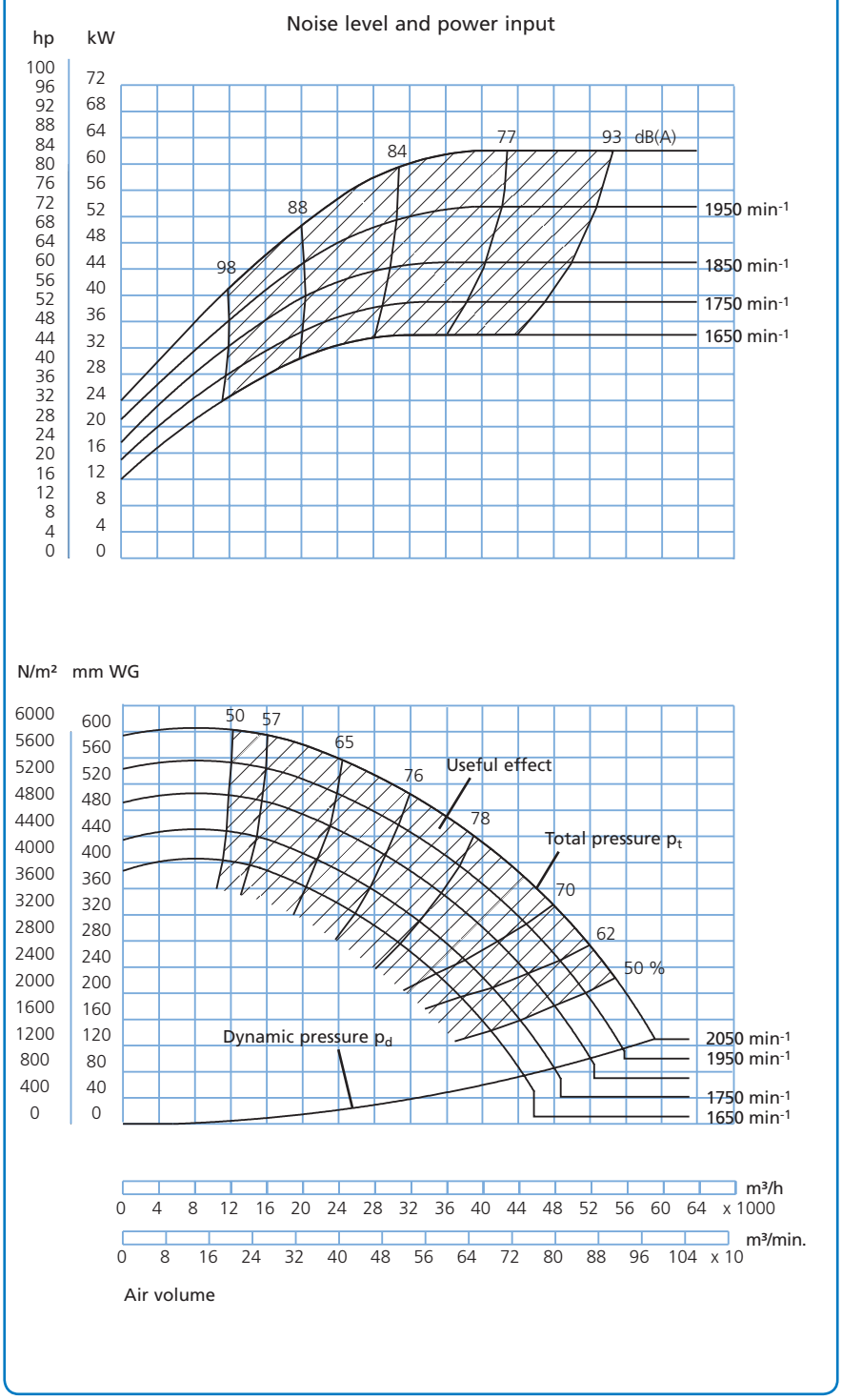

08.09.2014

Fan type JK-80MT
Technical data

Motor: IP 55

Supplied with the following motors:

kW	hp	amp.	Weight of motor kg
37,0	50,0	67,0	300
45,0	62,0	80,0	330
55,0	75,0	97,0	435
75,0	102,0	133,0	610
90,0	123,0	159,0	660

Max. min^{-1}:

Standard impeller: 1,850 min^{-1}

Operating range:

Air volume: 16,000 – 64,000 m³/h

Pressure: 160 – 560 mm WG

Power supply:

400 V - 50 Hz.

Construction:

B3 - motor mounted on foot.

Impeller:

No. of blades, standard: 8 pcs.

Diameter: ø1007 mm

Height: 357 mm

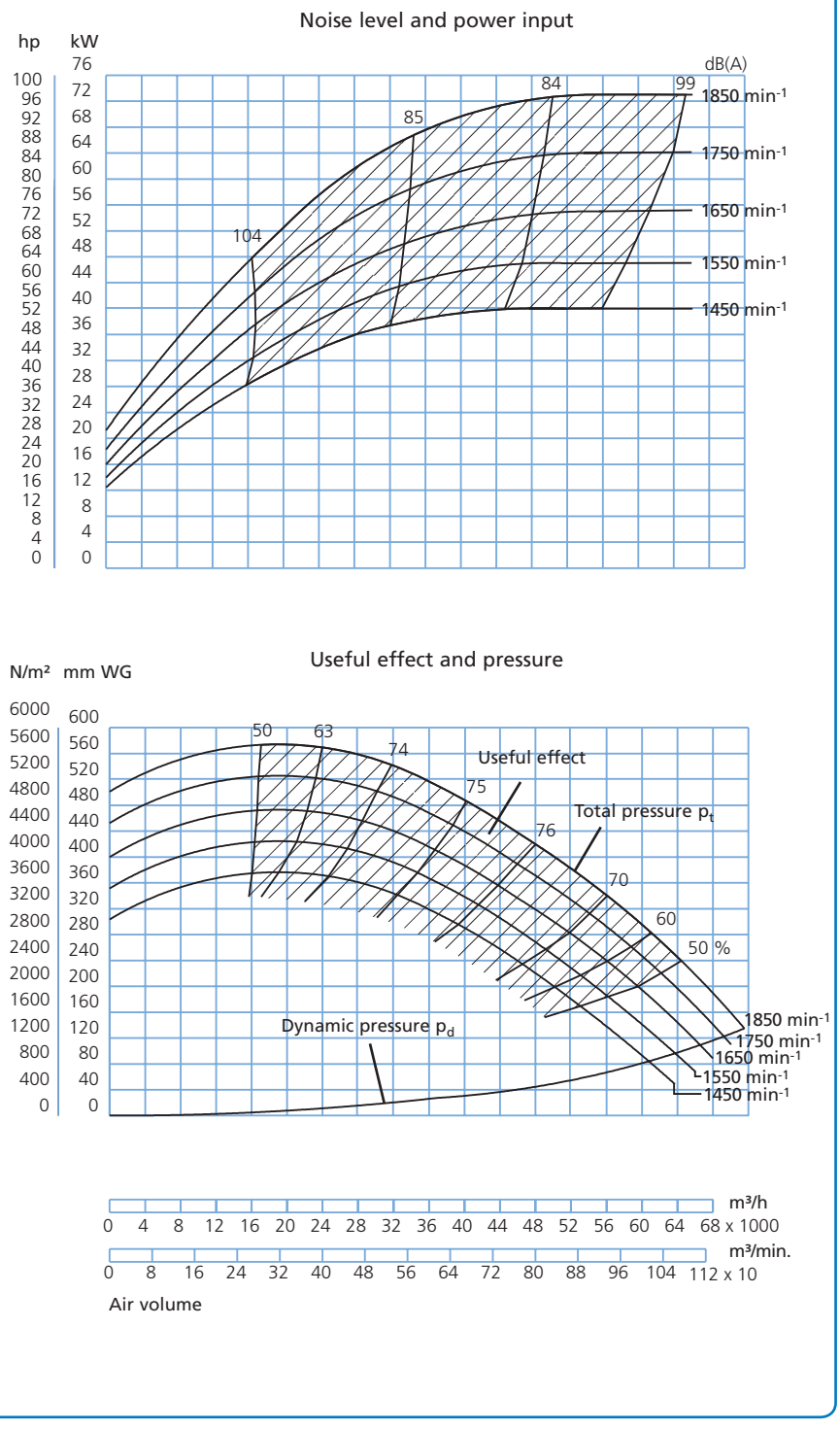

08.09.2014

Fan type JK-90MT
Technical data

Motor: IP 55

Supplied with the following motors:

kW	hp	amp.	Weight of motor kg
45,0	62,0	80,0	330
55,0	75,0	97,0	435
75,0	102,0	133,0	610
90,0	123,0	159,0	660
110,0	151,0	195,0	830

Max. min^{-1}:

Standard impeller: 1,650 min^{-1}

Operating range:

Air volume: 25,000 – 80,000 m³/h

Pressure: 150 – 560 mm WG

Power supply:

400 V - 50 Hz.

Construction:

B3 - motor mounted on foot.

Impeller:

No. of blades, standard: 8 pcs.

Diameter: ø1127 mm

Height: 417 mm

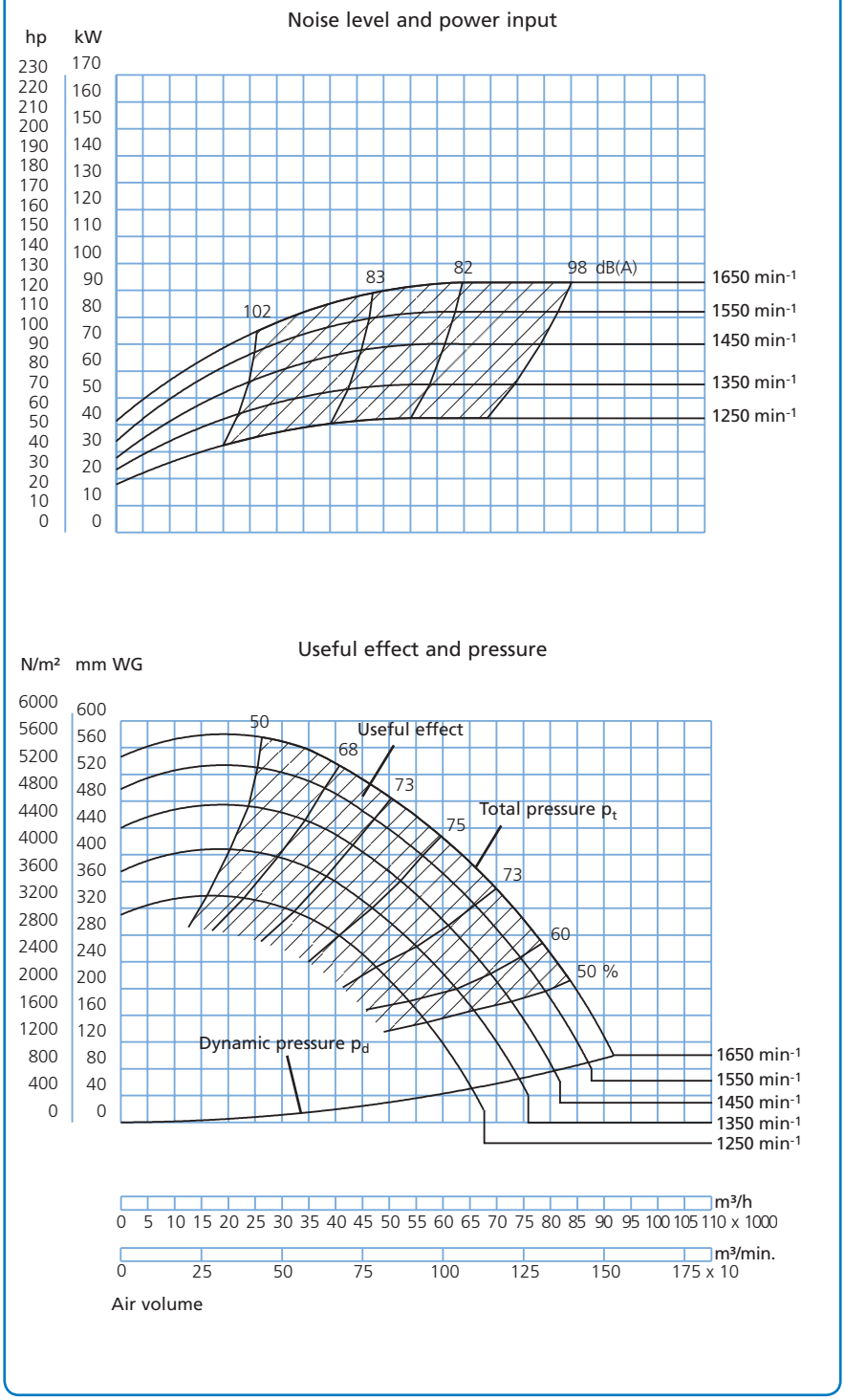

08.09.2014

Fan type JK-100MT
Technical data

Motor: IP 55

Supplied with the following motors:

kW	hp	amp.	Weight of motor kg
55,0	75,0	97,0	435
75,0	102,0	133,0	610
90,0	123,0	159,0	660
110,0	151,0	195,0	830
132,0	180,0	232,0	910

Max. min^{-1}:

Standard impeller: 1,550 min^{-1}

Operating range:

Air volume: 25,000 – 115,000 m³/h

Pressure: 140 – 600 mm WG

Power supply:

400 V - 50 Hz.

Construction:

B3 - motor mounted on foot.

Impeller:

No. of blades, standard: 8 pcs.

Diameter: ø1257 mm

Height: 484 mm

Noise level and power input

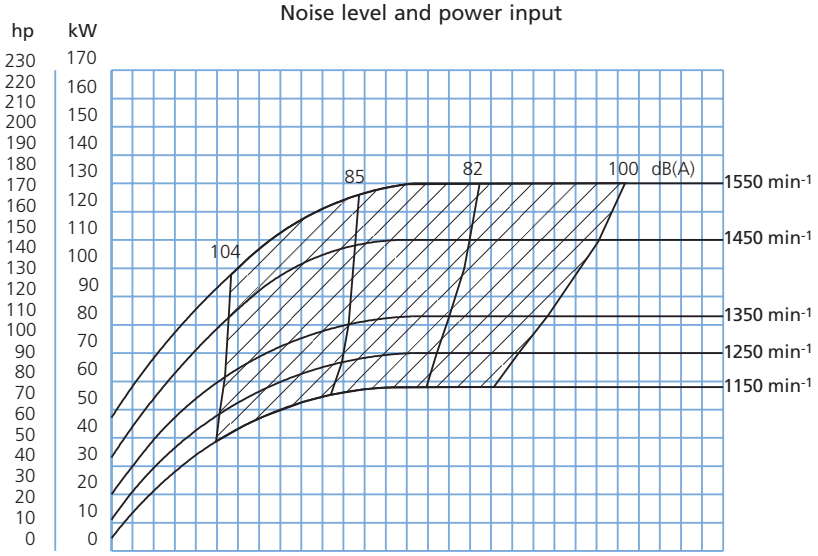

Useful effect and pressure

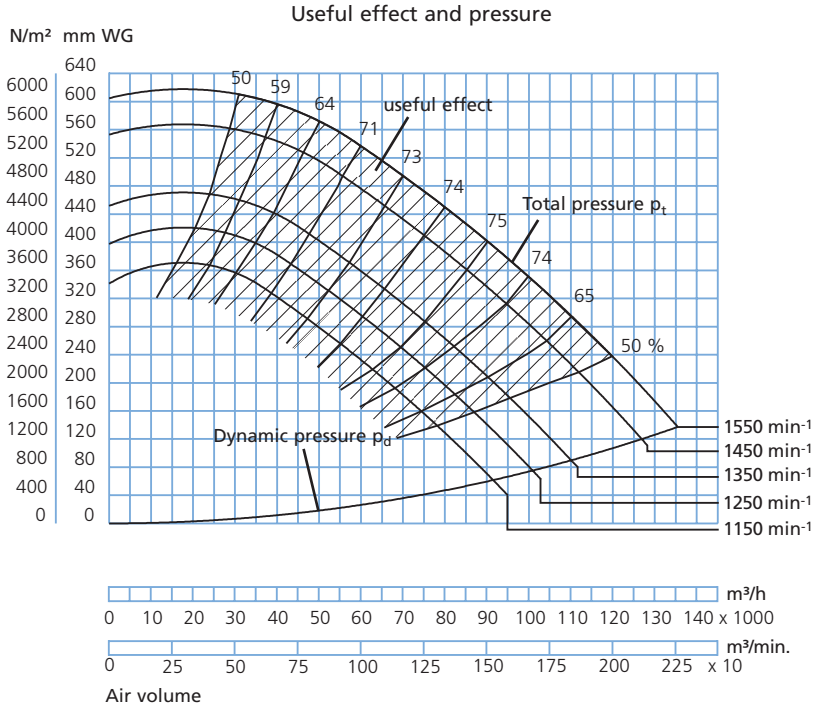

20.08.2014

High-pressure fans type JK-HT

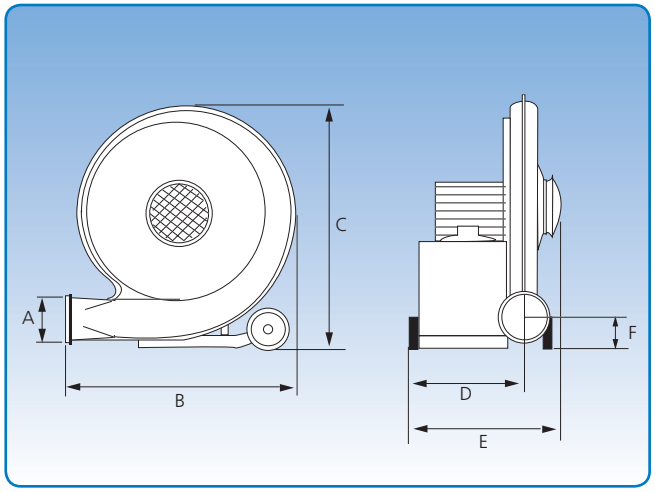

Types JK-2HT - JK-7HT with direct drive. JK-5HT is only available with throttle valve. Dimensional specifications are given in the table below.

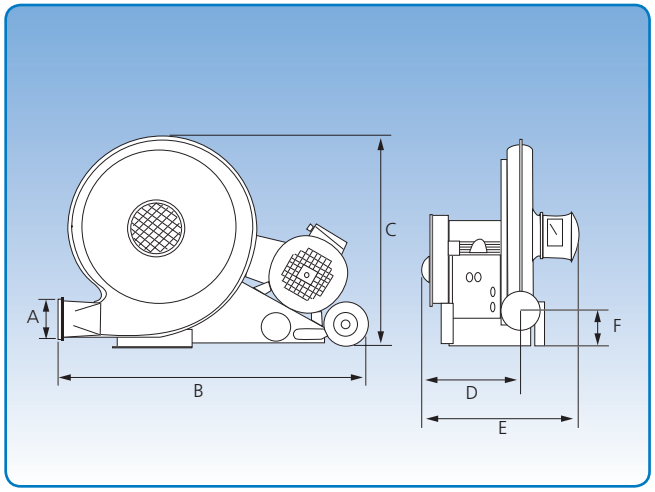

Type JK-10HT and JK-15HT with indirect drive. Dimensional specifications are given in the table below.

The JK-HT high-pressure fans are one-step centrifugal fans with sealed impellers. They are designed for transport of granular material with a density of between 0.2 and 1.2 tons/m³.

The material is delivered via a duct system using an injector or feeder unit. Material must never be transported through the fan.

The rotor is manufactured with backward-inclined blades. The aerodynamic design ensures high efficiency with low energy consumption.

The JK-2CFA and JK-3CFA feeder units or the injectors 2, 4 and 5 can be mounted on the high-pressure fans.

Ideal for transport, ventilation and extraction.

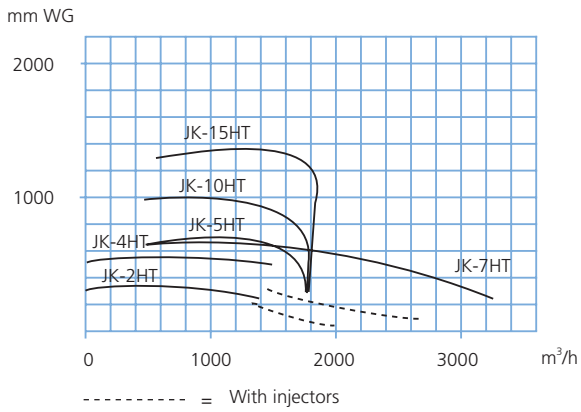

Type	Dimensions						Noise level at 7m dB(A)	Min. fuse rating amp.	Power consumption amp.
	A mm	B mm	C mm	D mm	E mm	F mm			
JK-2HT	JK-6"	635	675	335	485	130	64	10	3,4
JK-4HT	JK-6"	755	840	420	580	120	64	16	6,3
JK-5HT	JK-6"	755	840	420	670	129	77	16	8,5
JK-7HT	JK-6"	755	860	420	580	140	71	20	11,5
JK-10HT	JK-6"	1140	830	435	695	120	73	25	15,5
JK-15HT	JK-6"	1140	830	435	695	120	81	35	21,5

01.06.2010

High-pressure fans type JK-HT Technical data

Type JK-2HT
Motor size: 1.5 kW (2 hp)
min^{-1}: 2,850 min^{-1}
Max. air volume: 1,900 m³/h
Max. air pressure: 250 mm WG
Rotor speed: 2,850 min^{-1}
Weight: 35 kg

Type JK-4HT
Motor size: 3 kW (4 hp)
min^{-1}: 2,850 min^{-1}
Max. air volume: 2,600 m³/h
Max. air pressure: 350 mm WG
Rotor speed: 2,850 min^{-1}
Weight: 67 kg

Type JK-5HT
Motor size: 4 kW (5.5 hp)
min^{-1}: 2,850 min^{-1}
Max. air volume: 1,800 m³/h
Max. air pressure: 650 mm WG
Rotor speed: 2,850 min^{-1}
Weight: 76 kg

Type JK-7HT
Motor size: 5.5 kW (7.5 hp)
min^{-1}: 2,850 min^{-1}
Max. air volume: 3,200 m³/h
Max. air pressure: 650 mm WG
Rotor speed: 2,850 min^{-1}
Weight: 96 kg

Type JK-10HT
Motor size: 7.5 kW (10 hp)
min^{-1}: 2,850 min^{-1}
Max. air volume: 1,800 m³/h
Max. air pressure: 950 mm WG
Rotor speed: 3,650 min^{-1}
Weight: 129 kg

Type JK-15HT
Motor size: 11 kW (15 hp)
min^{-1}: 2,850 min^{-1}
Max. air volume: 1,800 m³/h
Max. air pressure: 1,300 mm WG
Rotor speed: 4,200 min^{-1}
Weight: 157 kg

Common specifications:
Motor: IP 55
Power supply: 3 x 400 V - 50 Hz

High pressure fans	L_{eq} (m)
JK-2HT + injector 2	4.5
JK-4HT + injector 4	5.7
JK-5HT/JK-7HT + injector 5	5.9
JK-5HT/JK-7HT + JK-2CFA	7.4
JK-10HT + JK-2CFA	8.9
JK-15HT + JK-2CFA/JK-3CFA	9.2

Transport capacity:
Air temperature = 20°C
Air pressure = 760 mm Hg

Horizontal and vertical duct lines with min. 2 m of straight ducts only between bends etc.

Transport capacity (tons/h) for barley, rye and maize:

Transport length (m)	10	20	30	40	50	60	80	100	120	150	200
JK-2HT + Injector 2	2.5	2.0	1.7	1.4	1.2	1.0	0.7	0.5			
JK-4HT + Injector 4	4.3	3.6	3.0	2.6	2.3	2.0	1.6	1.2			
JK-5HT-JK-7HT + Injector 5	4.7	3.9	3.3	2.9	2.5	2.2	1.8	1.4	1.1	0.8	
JK-5HT-JK-7HT + JK-2CFA	8.7	7.4	6.4	5.6	4.9	4.4	3.5	2.9	2.4	1.8	
JK-10HT + JK-2CFA	16.4	13.8	11.9	10.3	9.1	8.0	6.4	5.2	4.3	3.2	2.0
JK-15HT + JK-2CFA	16.5	15.9	15.3	14.7	13.2	11.7	9.3	7.6	6.2	4.6	2.9
JK-15HT + JK-3CFA	23.9	20.2	17.3	15.0	13.2	11.7	9.3	7.6	6.2	4.6	2.9

Transport capacity (tons/h) for wheat, rape and peas:

Transport length (m)	10	20	30	40	50	60	80	100	120	150	200
JK-2HT + Injector 2	2,3	1,9	1,6	1,3	1,1	0,9	0,7	0.5			
JK-4HT + Injector 4	4,0	3,3	2,8	2,5	2,1	1,9	1,5	1.1			
JK-5HT-JK-7HT + Injector 5	4,3	3,7	3,1	2,7	2,4	2,1	1,6	1,3	1,1	0.8	
JK-5HT-JK-7HT + JK-2CFA	8,2	6,9	6,0	5,2	4,6	4,1	3,3	2,7	2,2	1.7	
JK-10HT + JK-2CFA	15,3	12,9	11,1	9,7	8,5	7,5	6,0	4,9	4,0	3,0	1.9
JK-15HT + JK-2CFA	18,5	17,9	16,2	14,1	12,3	10,9	8,7	7,1	5,8	4,3	2.7
JK-15HT + JK-3CFA	22,3	18,8	16,2	14,1	12,3	10,9	8,7	7,1	5,8	4,3	2,7

Transport capacity (tons/h) for oats:

Transport length (m)	10	20	30	40	50	60	80	100	120	150	200
JK-2HT + Injector 2	2,5	2,0	1,7	1,4	1,2	1,0	0,7	0.5			
JK-4HT + Injector 4	4,3	3,6	3,0	2,6	2,3	2,0	1,6	1.2			
JK-5HT-JK-7HT + Injector 5	4,7	3,9	3,3	2,9	2,5	2,2	1,8	1,4	1,1	0.8	
JK-5HT-JK-7HT+ JK-2CFA	8,7	7,4	6,4	5,6	4,9	4,4	3,5	2,9	2,4	1.8	
JK-10HT + JK-2CFA	11,9	11,6	11,2	10,3	9,1	8,0	6,4	5,2	4,3	3,2	2.0
JK-15HT + JK-2CFA	11,9	11,6	11,2	10,9	10,5	10,2	9,3	7,6	6,2	4,6	2.9
JK-15HT + JK-3CFA	19,8	19,3	17,3	15,0	13,2	11,7	9,3	7,6	6,2	4,6	2,9

Capacity calculation:

Capacities given in the table apply to horizontal duct line + 4 m vertical ducts + 2 x 90° bends + outlet cyclone.

1. Transport length (m) = (horizontal length) + (vertical length) + (vertical length x 1.2) + ((number of 90° bends - 2) x L_{eq}) + (number of 30° bends x 1/3 L_{eq}) + (number of 45° bends x 1/2 L_{eq}) + (number of 60° bends x 2/3 L_{eq}) – 4.8.

   L_{eq} can be read from the table (bottom left) for actual combination of components.

2. Capacity is read from the above tables using transport length as follows:

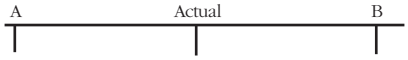

Transport length (m)

Capacity A Capacity Capacity B

$$\text{Capacity [tons/h]} = \text{Capacity (A)} - \left[\text{Capacity (A-B) x } \frac{\text{Transport length – Transport length (A)}}{\text{Transport length (B-A)}} \right]$$

3. Capacity corrected for water content + temperature + pressure. Correction factor can be seen in the diagrams below. Corrected capacity = Capacity x water factor x air factor.
   Note that calculated capacity is intended as a guide only, as leaks, grain size etc. can affect capacity.

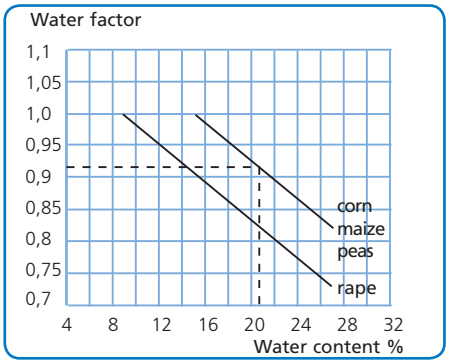

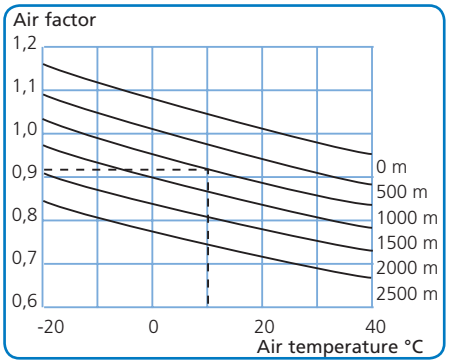

01.06.2010

Injectors and feeder units

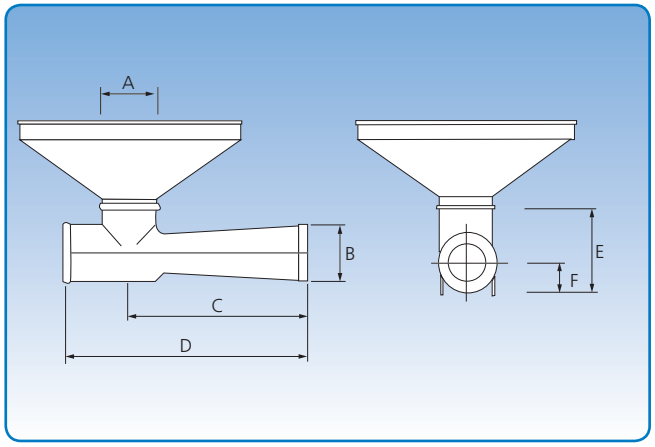

Injector. Dimensional specifications are given in the table below.

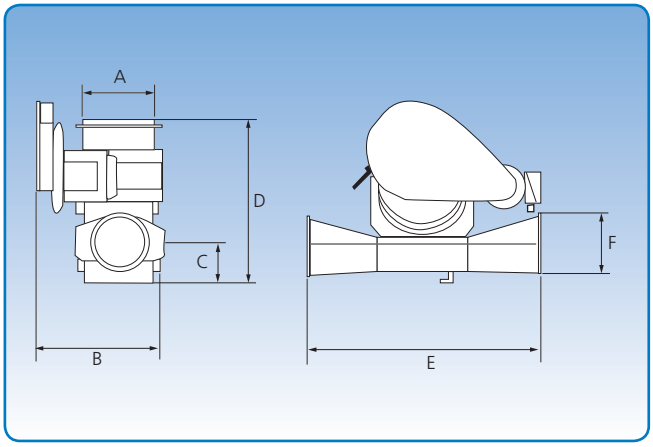

Feeder unit. Dimensional specifications are given in the table below.

The injectors are designed for mounting on high-pressure fan types JK-2HT, JK-4HT, JK-5HT and JK-7HT.

The feeder unit types JK-2CFA and JK-3CFA are designed for pneumatic transport in horizontal ducting.

They can be mounted in horizontal duct lines and withstand dust and pebbles taken in with the grain.

The rotor blades in the feeder units are rubber instead of steel, which flex when struck by hard objects in the air flow, avoiding being damaged.

Designed for use with JK-5HT, JK-7HT, JK-10HT and JK-15HT high-pressure fans where JK-15HT can be mounted with either JK-2CFA or JK-3CFA.

Type feeder units	A	B	C	D	E	F
	JK-8"	370	110 - 130	445 - 465	660	JK-6"
	JK-8"	460	120	495	850	JK-6"

Type injectors	A	B	C	D	E min.	F max.
Type 2	JK-6"	JK-6"	500	670	220 - 275	100 - 155
Type 4	JK-6"	JK-6"	500	670	220 - 275	100 - 155
Type 5	JK-6"	JK-6"	500	670	220 - 275	100 - 155

26.09.2013

Square flanges type A and round flanges

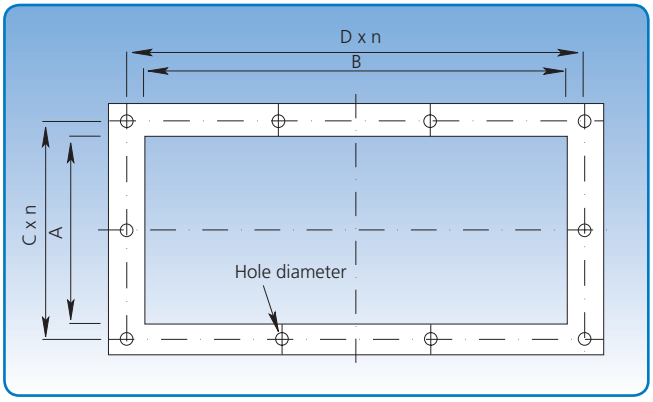

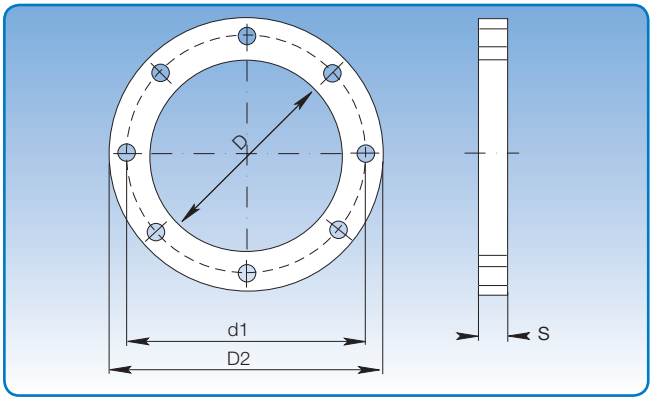

Square flange type A and round flanges.
Dimensional specifications are given in the table below.

Square flanges	Dimensions						
Fan type	A mm	B mm	C x n mm	D x n mm	Hole diameter mm	Material mm	Weight kg
JK-20D	140	140	85 x 2	85 x 2	11	30 x 6	1,04
T-200K/JK-22D	166	166	98 x 2	98 x 2	11	30 x 6	1,20
JK-25D	186	186	108 x 2	108 x 2	11	30 x 6	1,32
JK-30D/JK-30K	206	206	118 x 2	118 x 2	11	30 x 6	1,44
JK-35D	226	226	128 x 2	128 x 2	11	30 x 6	1,69
JK-40D/JK-40K	251	251	94 x 3	94 x 3	11	30 x 6	1,69
JK-30MTD/JK-30MT	251	251	94 x 3	94 x 3	11	30 x 6	1,71
T-300K	326	226	85 x 3	119 x 3	11	30 x 6	1,71
JK-45K	339	339	123 x 3	123 x 3	11	30 x 6	1,22
JK-40MTD/JK-40MT	350	350	95 x 4	95 x 4	11	30 x 6	2,14
JK-55K	418	418	112 x 4	112 x 4	11	30 x 6	2,74
JK-50MTD/JK-50MT	455	455	124 x 4	124 x 4	12	40 x 6	3,70
JK-60MTD/JK-60MT	505	505	109 x 5	109 x 5	12	40 x 6	4,00
JK-75K	555	704	119 x 5	124 x 6	12	40 x 6	5,14
JK-70MTD/JK-70MT	605	605	129 x 5	129 x 5	12	40 x 6	4,80
JK-80MTD/JK-80MT	705	705	149 x 5	149 x 5	12	40 x 6	5,58
JK-90MTD/JK-90MT	805	805	141 x 6	141 x 6	12	40 x 6	6,33
JK-100MT	905	905	135 x 7	135 x 7	12	40 x 6	7,10

Round flanges	Dimensions								
Fan type	Diameter nominal	D mm	d1 mm	D2 mm	s mm	Flange width mm	Hole size mm	No. of holes	Weight kg
JK-30MT	300	305	336	355	5,00	25	9	12	1,00
JK-40MT	400	405	439	465	6,00	30	11	16	2,08
JK-50MT/JK-50LA	500	505	540	565	6,00	30	11	16	2,56
JK-60MT/JK-60LA	600	605	640	665	6,00	30	11	16	3,08
JK-70MT/JK-70LA	700	705	750	785	6,00	40	11	24	3,53
JK-80MT/JK-80LA	800	805	850	885	6,00	40	11	24	5,40
JK-90MT/JK-90LA	900	905	950	985	6,00	40	11	24	6,05
JK-100MT/JK-100LA	1000	1005	1050	1085	6,00	40	11	24	6,69

08.02.2016

Twist throttles

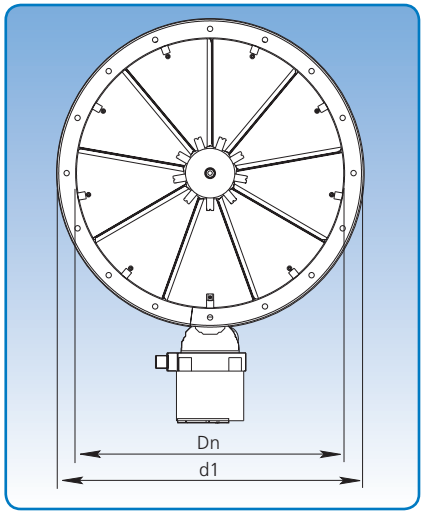

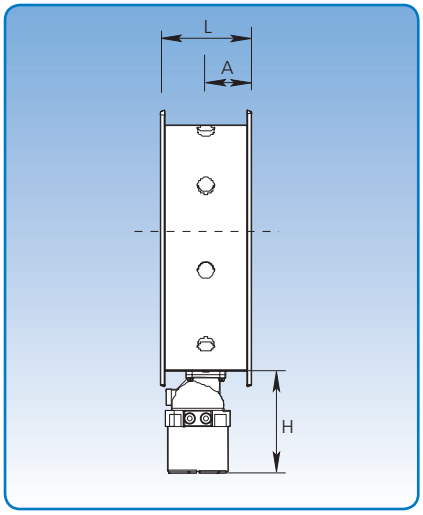

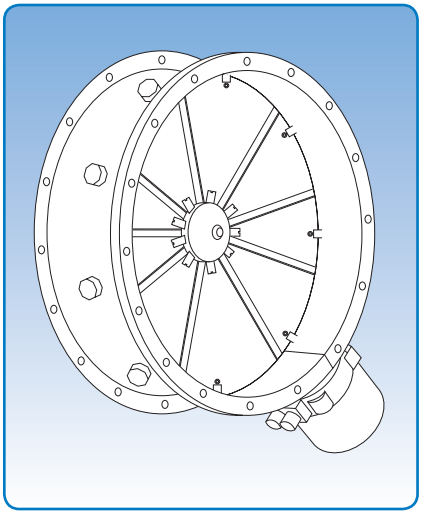

Dimensional specifications are given in the table below.

A centrally driven twist throttle, type JK-LA, is used to regulate air volume to the fan in the most energy-efficient way.

The twist throttle is mounted directionally with flow in the direction of the arrow. Regulation is achieved by all the twist blades turning synchronously between 0° - 90° to create pre-rotation of the air flow entering the fan. The load on the fan impeller is reduced and consequently power consumption. The JK-LA twist throttle can reduce total energy consumption by up to 40%. The turning mechanism in the hub is designed as a sealed, compact and robust unit with a minimum number of components and extremely low friction. The twist throttle requires no servicing and can be used as a throttle valve.

Types JK-50LA and JK-60LA uses:

Make: Bernard OA3

0.02 kW: 1 x 230 V - 50 Hz

Types JK-70LA, JK-80LA, JK-90LA and JK-100LA uses:

Make: Bernard OA8

0.06 kW: 1 x 230 V - 50 Hz

0.10 kW: 3 x 400 V - 50 Hz

Max. operating temperature: 60°C

Actuator:

Frame leakage class, all models: IP 67.

Resistance coefficient for fully open twist throttle: 0.25 – 0.5.

The torque stated is based on differential pressure of p = 500 mm WG.

Specific dimensions for flanges can be found under “Flanges”.

Power supply:

Single phased 3 phased

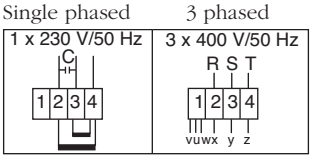

Type	Dimensions					No. of twist blades	Required torque	Weight kg
	Ø. Dn mm	L mm	A mm	d1 mm	H mm			
JK-50LA	500	220	110	585	240	9	24	26,7
JK-60LA	600	220	110	685	240	9	31	31,3
JK-70LA	700	220	110	795	240	9	41	37,1
JK-80LA	800	245	123	890	240	12	56	43,3
JK-90LA	900	245	123	990	200	12	79	52,6
JK-100LA	1000	245	123	1090	200	12	114	59,2

19.09.2013

Acoustic booths type AB

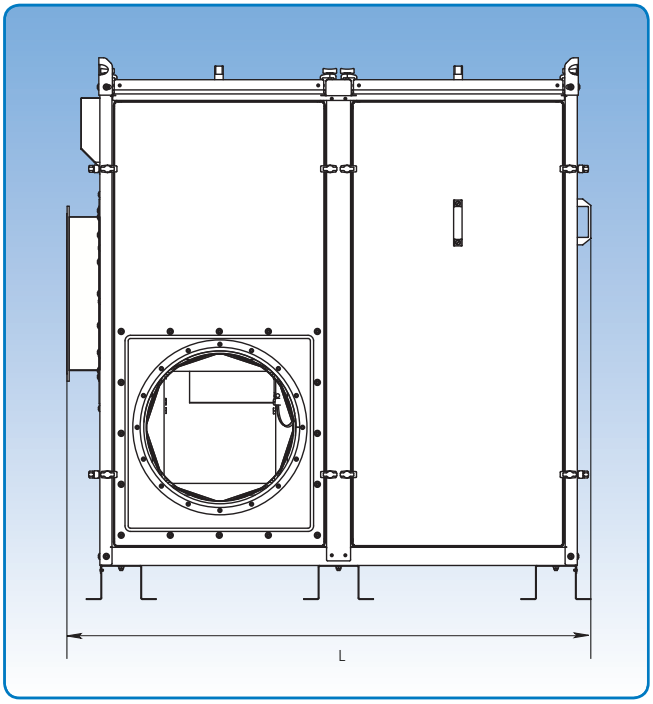

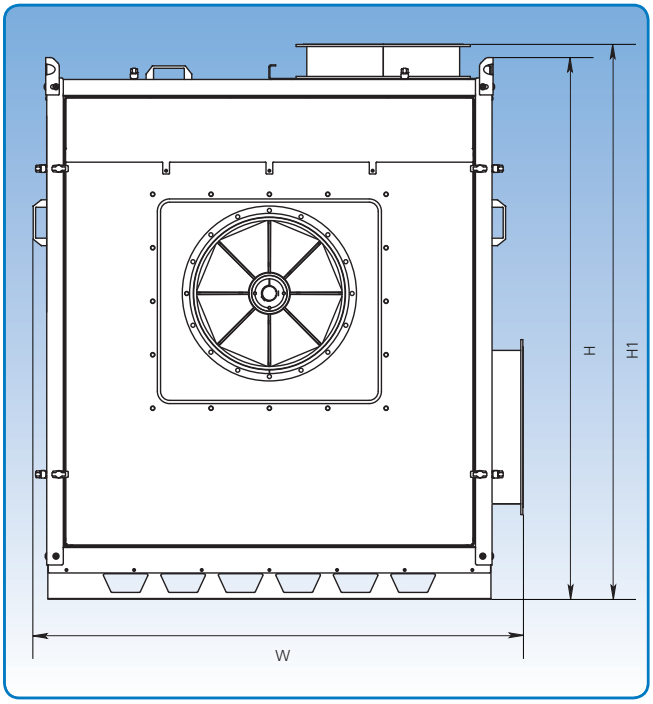

For dimensional specifications, see below.

The type AB acoustic booths are used for noise reduction. The acoustic booths are supplied with fitted fan or in kit form.
The acoustic booth is as standard supplied with rotatable flange fitted on in- and outlet. This provides easy connection to the remaining ducting. Acoustic booths are supplied with same dimension of inlet and outlet flange as the fan.
Acoustic booths are assembled by means of clamps that hold the big panels to the steel frame.
At service/inspection you can then quickly remove the sides and have easy access to the fan. The panels are provided with handle for easy handling. The panels tighten with rubber strip against the frame. Noise and vibrations are in this way reduced. Acoustic booths are made from galvanized sheet (Z275).
The damping material is an environment friendly material, made from recycling material from polyethylene production, covered with foil and fire resistant material.
The acoustic booth is as standard supplied with cooling fan fitted in bottom, for optimum cooling.

Extras

The acoustic booths are supplied with light fixture to the ceiling lights, thermostat control for cooling fan and connection box for assembly of cables as extras.

Type	Dimensions			Weight
	L mm	W mm	H(H1) mm	kg
AB-20	990	1133	1265 (1305)	139
AB-30	1410	1315	1460 (1499)	198
AB-40	1549	1453	1595 (1633)	252
AB-50	2140	1823	2247	501
AB-60	2500	2071	2477	644
AB-70	2871	2262	2549	871
AB-80	3075	2615	2884	970
AB-85	3075	2615	3135	1013

09.05.2017

Acoustic booths type AB
Technical data

Cooling fan is fitted in a sound absorbent box with washable intake filter.

Cooling fan type 4656 Z:
Power supply 230 V, 50/60 Hz
at 230 V, 18 W, 0,1 A
For use with max. 5,5 kW electric motor
For use with type AB-20 and AB-30 acoustic booth

Cooling fan type W 2 E 200 HH 38-05:
Power supply 230 V, 50/60 Hz or 230/400 V, 50/60 Hz
at 230 V, 80 W, 0,35 A
For use with 7,5 – 22 kW electric motor
For use with type AB-30 – AB-50 acoustic booth

Cooling fan type W 2 E 250 HL 06-01:
Power supply 230 V, 50/60 Hz or 230/400 V, 50/60 Hz
at 230 V, 127 W, 0,83 A
For use with 30 – 90 kW electric motor
For use with type AB-50 – AB-85 acoustic booth

Noise reduction
The diagram shows the noise-suppression values for fans in acoustic booth.
Individual reports for each combination of fan and acoustic booth can be provided.
Noise measurement made by DELTA.

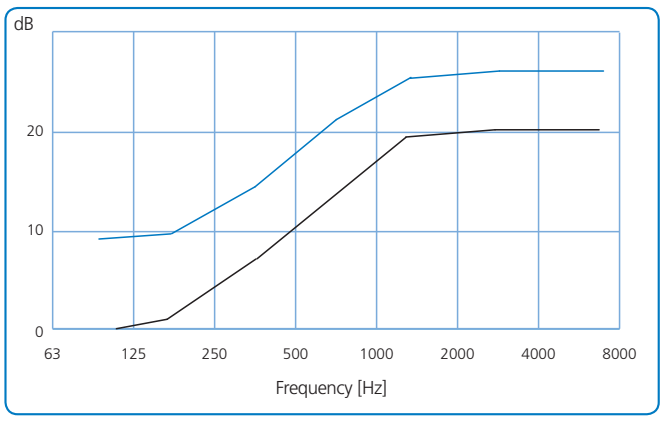

Black diagram shows general damping values for fans in acoustic booth. Blue diagram shows equivalent damping values, when structure borne noise from fan and acoustic booth is not transmitted.

Fan	Position RV, LO	RN, LN	RO, LV
JK-20D	AB-20	AB-20	AB-20
JK-22D	AB-20	AB-20	AB-20
JK-25D	AB-20	AB-20	AB-20
JK-30D	AB-20	AB-20	AB-20
JK-35D	AB-30	AB-30	AB-30
JK-40D	AB-30	AB-30	AB-30
JK-30K	AB-30	AB-30	AB-30
JK-40K	AB-40	AB-40	AB-40
JK-45K	AB-40	AB-40	AB-50*
JK-55K	AB-50	AB-50	AB-50
JK-75K	AB-60	AB-60	AB-60
T-200K/D	AB-40	AB-40	AB-40
T-300K/D	AB-50	AB-50	AB-50
T-400K/D	AB-50	AB-50	AB-50
T-500K/D	AB-60	AB-60	AB-60
JK-30MTD/MTDP	AB-30	AB-30	AB-30
JK-40MTD/MTDP	AB-30	AB-30	AB-40*
JK-50MTD/MTDP	AB-50	AB-50	AB-50
JK-55MTD	AB-60	AB-60	AB-60
JK-60MTD/MTDP	AB-60	AB-60	AB-60
JK-70MTD/MTDP	AB-60	AB-60	AB-70*
JK-80MTD/MTDP	AB-70	AB-70	AB-80*
JK-90MTD/MTDP	AB-70	AB-80*	AB-80*
JK-30MT	AB-30	AB-30	AB-30
JK-40MT	AB-40	AB-40	AB-40
JK-50MT	AB-50	AB-50	AB-50
JK-50MT L	AB-50	AB-50	AB-50
JK-60MT	AB-50	AB-50	AB-50
JK-60MT L	AB-60	AB-60	AB-60
JK-70MT	AB-60	AB-60	AB-60
JK-70MT L	AB-70	AB-70	AB-70
JK-80MT	AB-60	AB-60	AB-70*
JK-80MT L	AB-70	AB-70	AB-70
JK-90MT	AB-70	AB-80*	AB-80*
JL-90MT L	AB-80	AB-80	AB-80
JK-100MT	AB-80	AB-80	AB-85*
JK-100MT L	AB-80	AB-80	AB-85*

Choice of acoustic booth:
L after fan description indicates long version with guide vane.
** The fan can with alternative position, be installed in a smaller acoustic booth.*

01.06.2010

Duct silencers

Diameter: 100 mm - 1250 mm.

The duct silencers are used for noise-suppression in ducting systems.

They are made of 1.00 mm galvanised steel sheet, lined with sound-absorbent material.

Can be supplied for fitting to rapid lock pull rings [f.lyn], pull rings [f.b], wide pull rings [f.bb] or loose flanges [f.b.m.fl].

Duct silencers with an internal diameter of > 250 mm can be supplied with baffles.

They can be fitted internally with perforated plates for ducting carrying light materials, or insulation material as options.

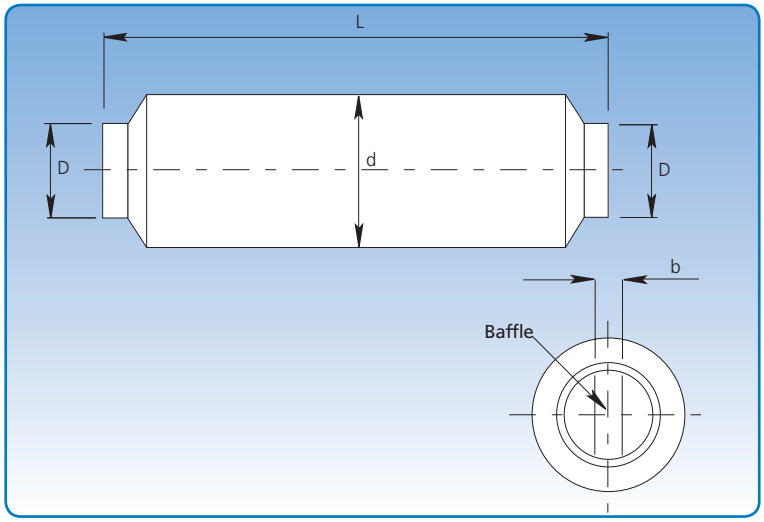

The diagrams show the noise-suppression values for fans and high-pressure fans under the operating conditions stated on the brochure pages. Authorised measurement of noise levels has been performed on the duct silencers.

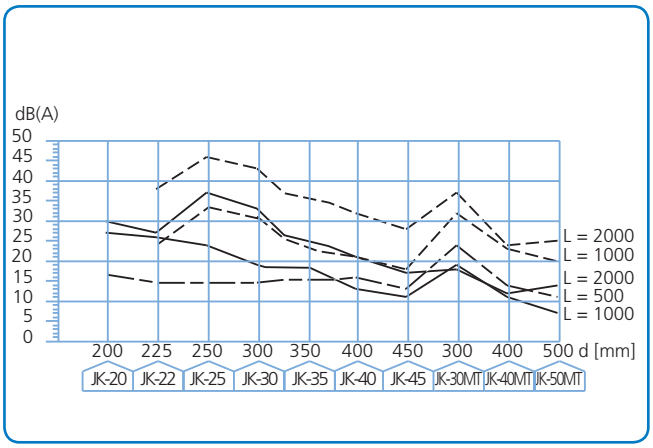

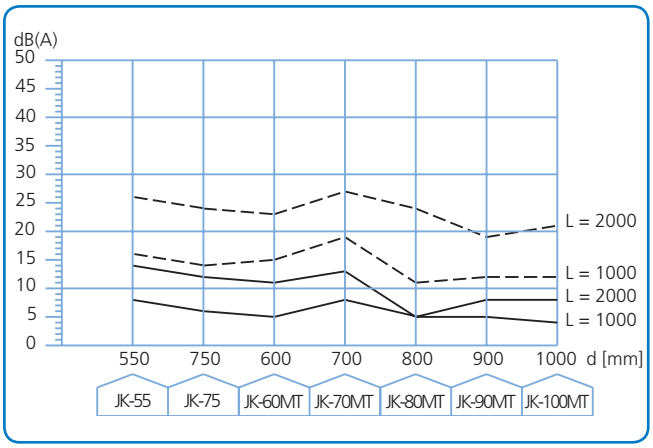

– – – – – – – = *with baffle* ——————— = *without baffle*

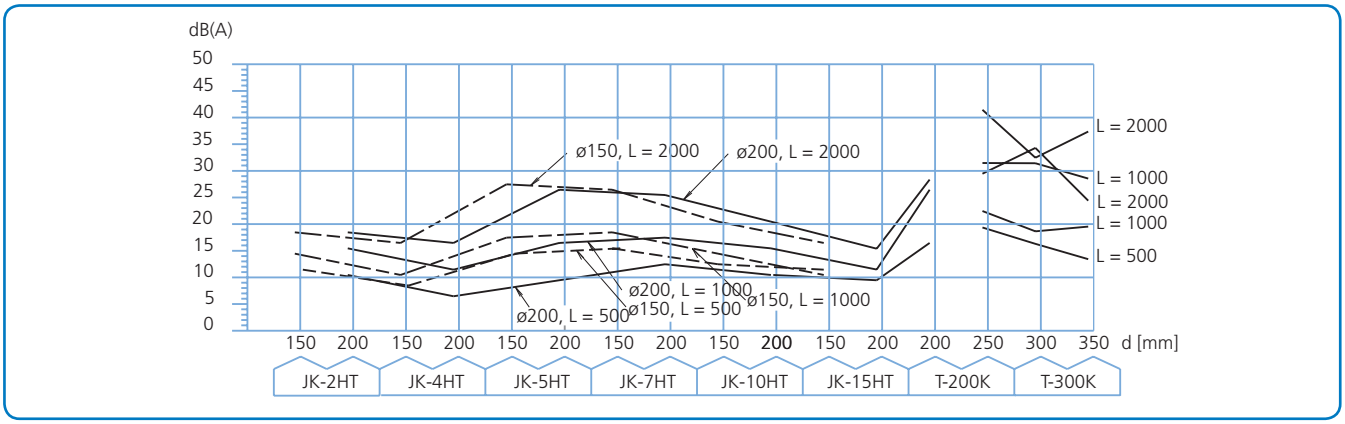

The diagrams show the noise-suppression values in dB(A) for fans.

01.06.2010

Duct silencers
Technical data

Noise-suppression values in dB(A) for various frequency bands.

Dimensions				Frequency bands							
D mm	d mm	L mm	b mm	Hz 63	Hz 125	Hz 250	Hz 500	Hz 1000	Hz 2000	Hz 4000	Weight kg
100	300	500		3	12	25	42	35	31	21	6
120	320	500		3	10	19	33	27	24	16	6
125	325	500		3	9	19	32	26	23	15	6,5
140	340	500		2	9	18	30	26	23	15	7
150	350	500		2	9	17	28	24	22	15	7
160	360	500		2	8	16	26	22	20	13	8
180	380	500		1	8	14	24	20	18	13	8,5
200	400	500		1	7	13	22	18	16	11	9
200	400	1000		3	13	25	42	35	31	21	17
225	425	500		1	6	11	20	16	15	10	10
225	425	1000		2	11	22	38	31	28	19	18
250	450	1000		2	10	20	34	28	25	17	20
250	450	1000	100	7	16	27	47	50	43	38	25
275	475	1000		2	10	19	32	26	22	16	21
275	475	1000	100	6	15	26	44	48	38	44	26
300	500	1000		2	9	17	29	23	18	14	22
300	500	1000	100	6	13	25	41	46	33	50	28
315	515	1000		2	8	16	27	21	17	11	24
315	515	1000	100	5	12	22	39	44	31	27	30
350	550	1000		2	7	14	24	18	15	9	26
350	550	1000	100	4	10	20	36	39	28	23	32
400	600	1000		2	6	12	21	14	13	8	29
400	600	1000	100	4	9	18	31	35	25	20	36
450	650	1000		3	6	11	19	11	11	6	32
450	650	2000		5	11	19	38	20	17	10	60
450	650	1000	100	4	8	15	29	31	21	17	40
450	650	2000	100	7	14	28	50	50	37	32	73
500	700	1000		4	6	11	19	8	8	4	37
500	700	2000		6	11	18	35	16	14	8	66
500	700	1000	100	5	7	14	25	28	20	15	45
500	700	2000	100	8	13	25	47	50	37	30	80
550	750	1000		3	5	10	17	8	7	4	38
550	750	2000		5	10	17	32	15	13	7	71
550	750	1000	100	4	6	13	22	26	18	14	47
550	750	2000	100	7	12	23	42	50	35	27	86
600	800	1000		3	5	9	15	7	6	3	42
600	800	2000		5	9	16	28	14	12	6	77
600	800	1000	100	4	6	11	20	24	16	11	52
600	800	2000	100	7	11	20	38	46	32	21	93
630	830	1000	100	4	6	11	18	22	15	10	54
630	830	2000	100	7	11	20	34	42	30	20	97
650	850	1000	100	3	6	10	17	21	14	9	55
650	850	2000	100	5	11	19	31	41	27	17	100
700	900	1000	200	5	7	14	24	21	24	14	69
700	900	2000	200	8	14	26	45	42	46	27	123
750	950	1000	200	5	6	11	20	18	17	11	74
750	950	2000	200	8	12	21	38	36	33	20	131
800	1000	1000	200	4	6	11	19	17	16	10	79
800	1000	2000	200	7	12	21	36	34	30	19	139
850	1050	1000	200	3	5	10	17	16	15	9	84
850	1050	2000	200	5	11	19	32	32	29	18	147
900	1100	1000	200	3	5	10	15	15	14	9	89
900	1100	2000	200	5	11	18	30	30	27	17	155
950	1150	1000	200	3	5	9	14	14	13	8	94
950	1150	2000	200	5	10	17	27	27	25	16	164
1000	1200	1000	200	3	5	9	14	13	13	8	99
1000	1200	2000	200	5	10	17	26	25	24	15	172
1250	1450	1000	200	2	4	7	11	11	10	5	126
1250	1450	2000	200	4	7	13	20	21	19	11	214

01.06.2010

Vibration dampers, cooling wings, gaskets, pullers

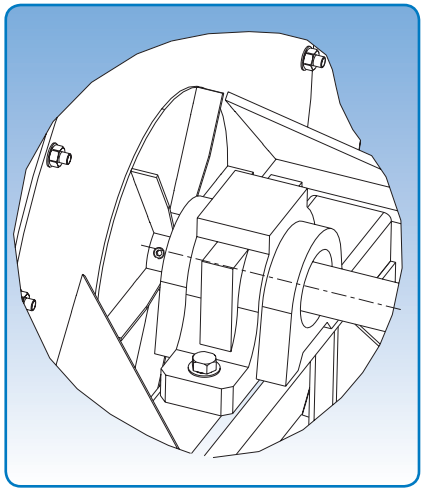

Cooling wings

Cooling wings are mounted between the fan housing backplate and the bearing nearest the fan housing.

They are used when the fan is working with hot air and necessary for temperatures over 150°C. For temperatures over this mark the bearing housing is filled with temperature-resistant, high quality grease.

The cooling wings are secured to the fan drive shaft, and they are designed to protect the bearings.

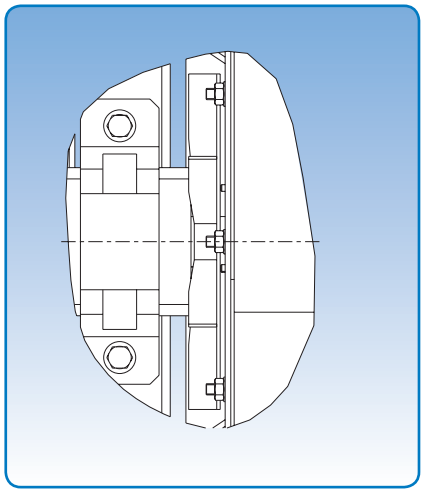

Cooling wings

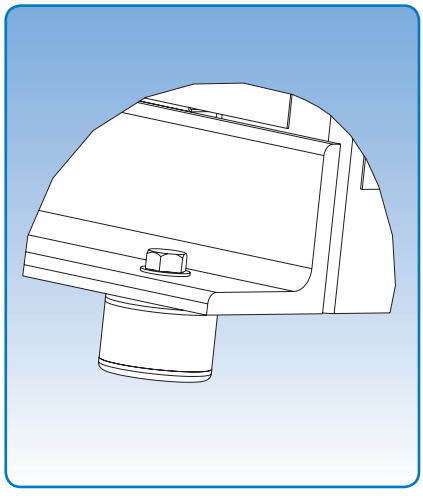

Vibration dampers

Vibration dampers are always used in combination with flexible connections on the inlet and outlet of the fan – never alone.

The dimensions of vibration dampers are governed by the total weight of the fan. There are threads on both sides for fitting.

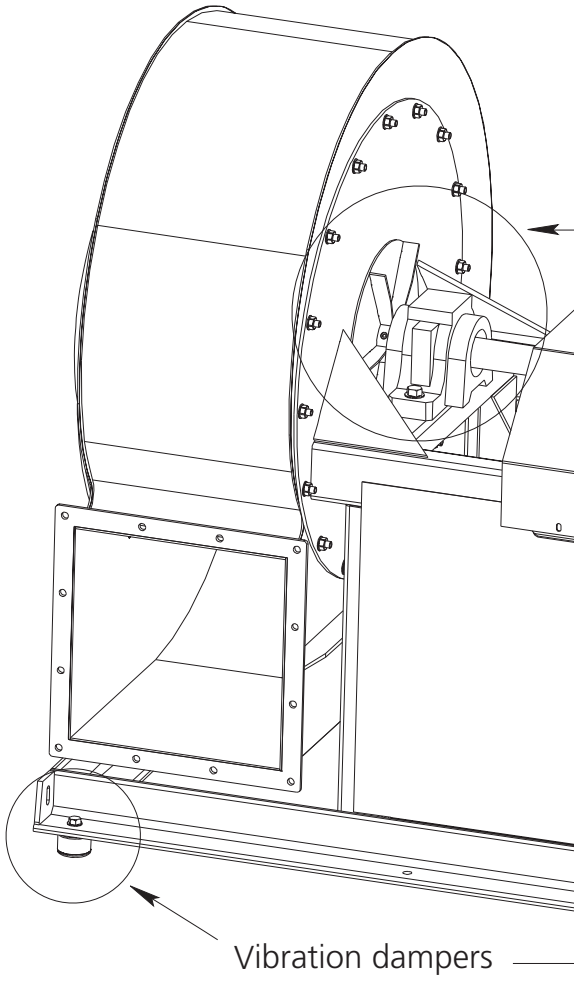

01.06.2010

Vibration dampers, cooling wings, gaskets, pullers

Cooling wings

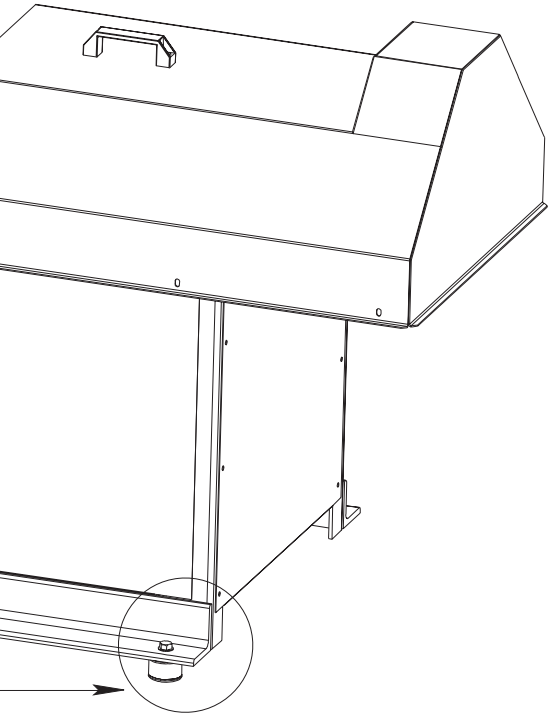

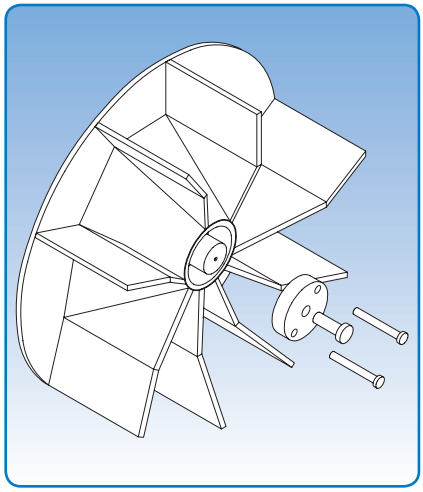

Pullers

Pullers for impellers

The pullers are available in three versions as optional extras for all JK-D and JK-K fans.

No. 1: JK-55K, JK-75K, T-300K, JK-60MT, JK-70MT, JK-80MT, JK-90MT, JK-100MT

No. 2: JK-40D, JK-45K, T-200K, JK-40MTD, JK-50MT

No. 3: JK-20D, JK-22D, JK-25D, JK-30D, JK-30MTD, JK-30MT, JK-35D, JK-30K, JK-40K, JK-40MT

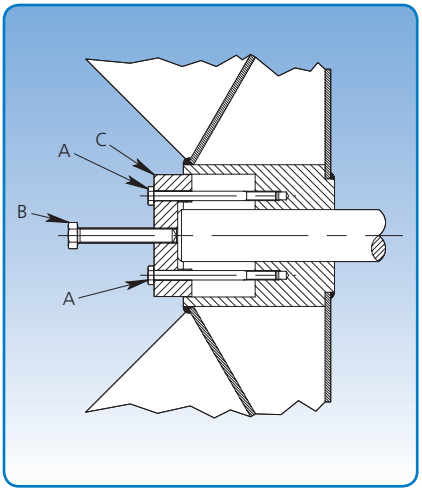

Installation guide

Mounting

Remove taperlock and adaptor ring.

Fit disk C into impeller hub.

Tighten bolts A.

Tighten bolt B.

Pull impeller over the shaft.

Disk C can be used as a drilling template for hubs with no screw holes.

Shaft gaskets for fans

A gasket is fitted between shaft and fan housing. All fan types JK-D, JK-K and T are fitted with this specially developed gasket, which is fitted on the visible part of the shaft between the housing and impeller backplates inside the fan housing. JKF recommend the gasket is replaced if the impeller is removed for any reason.

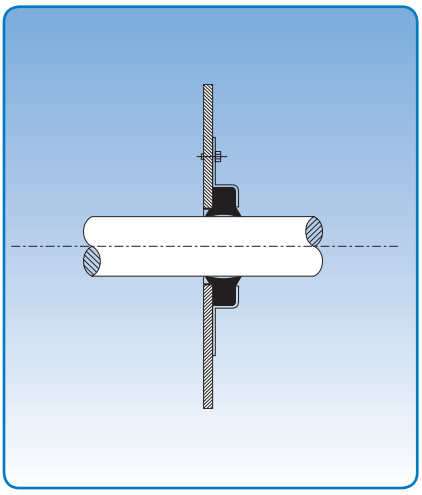

Shaft gasket

01.06.2010

Flexible connections

Circular and square flexible connections are available, with or without steel insert.

They are designed to fit the inlets and outlets of the fan range. Other dimensions can be produced to order.

A steel insert is usually included for transport fans and without for clean air fans.

They can also be fitted in standard duct systems.

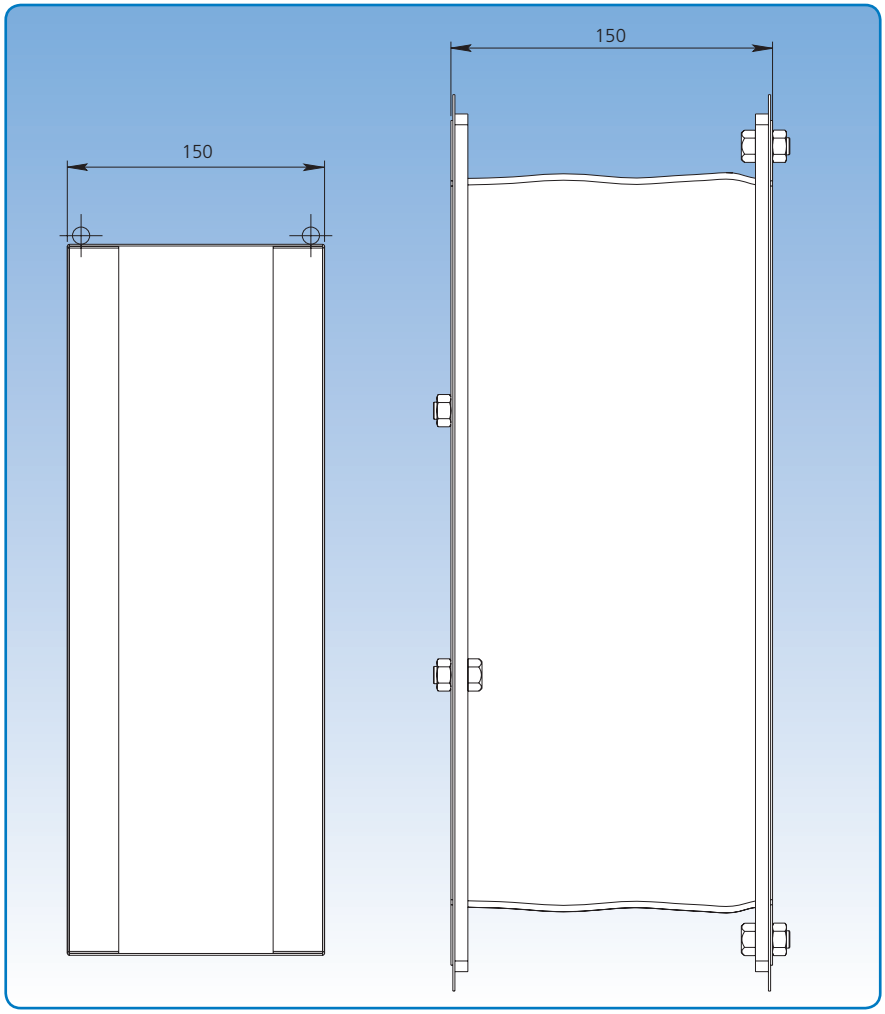

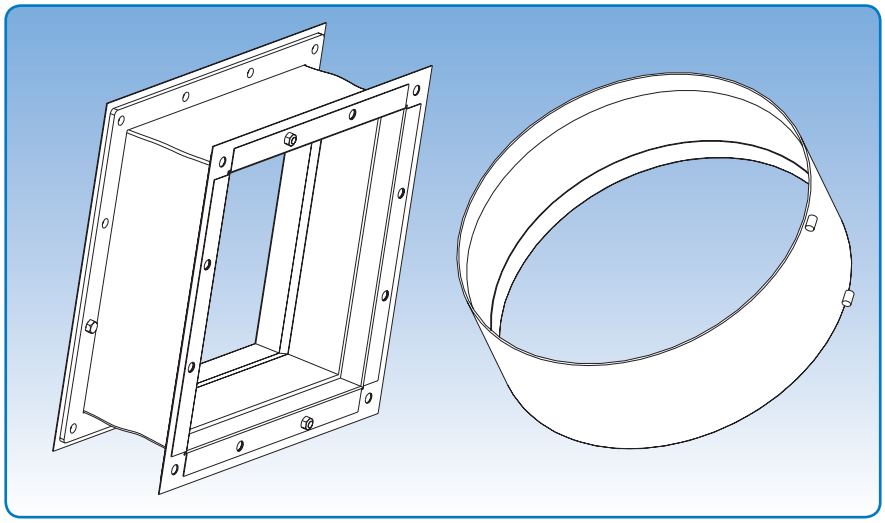

Square with steel insert.

Circular without steel insert.

THE WAY TO CLEAN AIR

JKF Industri A/S
Rørsangervej 5, Als
9560 Hadsund
Denmark
Tel: +45 98581211
Fax: +45 98581177
info@jkf.dk
www.jkf.dk

JKF Polska Sp. z o.o.,
Berzyna 81,
64-200 Wolsztyn
Poland
Tel: +48 683470700
Fax: +48 683845338
info@jkfpolska.pl
www.jkfpolska.pl

JKF Industri Sdn. Bhd.
Lot 8521, Jalan Persiaran Galla,
Galla Industrial Park, 70200 Seremban
N.S.D.K., Malaysia
Tel: +60 67649861
Fax: +60 67649863
info@jkf.com.my
www.jkf.com.my

buchs.dk